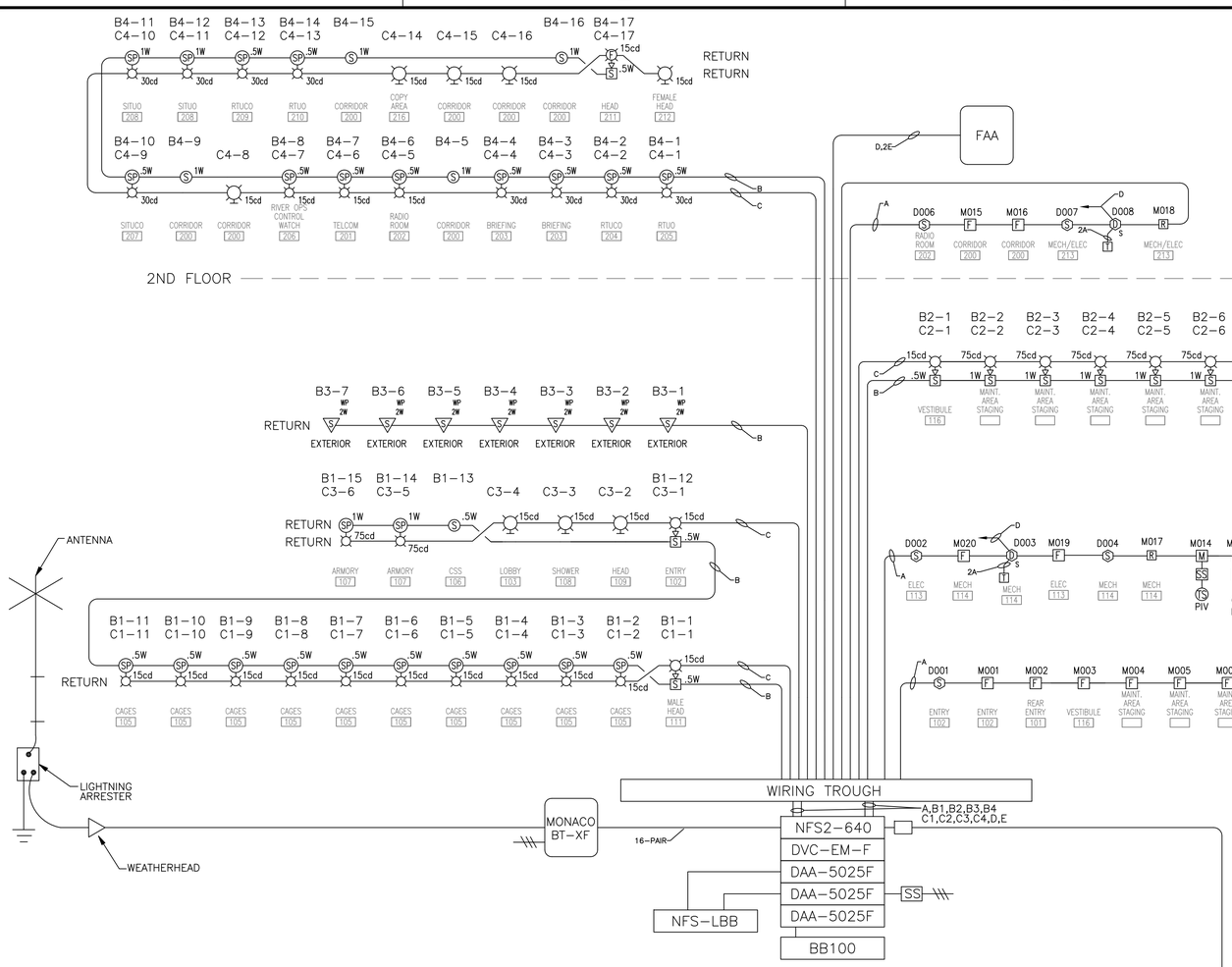

1 FA1.0 FA1.0 BLDG 2440/2441 FIRE ALARM SYSTEM RISER DIAGRAM

SCALE: NOT TO SCALE

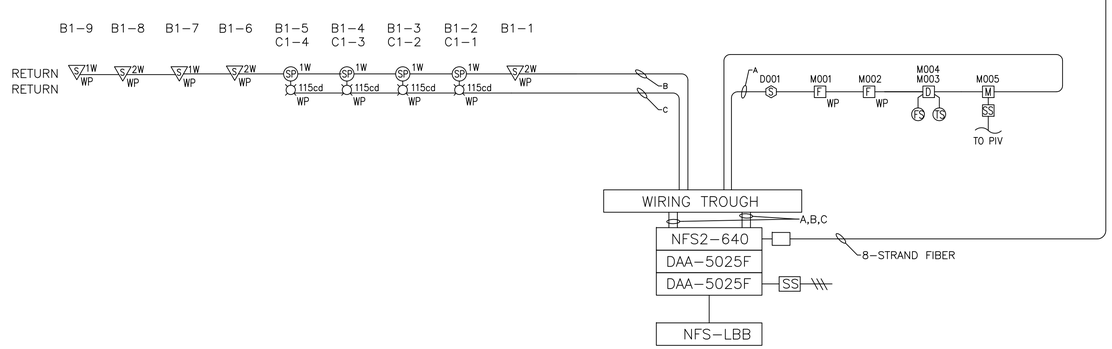

2 FA1.0 FA1.0 BLDG 2442 FIRE ALARM SYSTEM RISER DIAGRAM

SCALE: NOT TO SCALE

	TRANSMIT ALARM SIGNAL TO FIRE DEPT.	TRANSMIT SUPERVISORY SIGNAL TO FIRE DEPT.	TRANSMIT TROUBLE SIGNAL TO FIRE DEPT.	VISUAL INDICATION ON FACP	ACTIVATE FIRE ALARM MESSAGE & CLEAR STROBES	RECORD EVENT IN FACP HISTORY	ACTIVATE ASSOCIATED MESSAGE & CLEAR STROBES	SHUT DOWN ASSOCIATED AHU
MANUAL PULL STATION	●			●	●	●		
SMOKE DETECTOR	●			●	●	●		
DUCT SMOKE DETECTOR	●			●	●	●		●
WATER FLOW SWITCH	●			●	●	●		
SPRINKLER VALVE CLOSED		●		●		●		
TROUBLE CONDITION IN FA SYSTEM			●	●		●		
ACTIVATION OF MNS INPUT							●	

SEQUENCE OF OPERATIONS

NOTE: INTERFACE TO ACCESS CONTROL SYSTEM IS NOT REQUIRED. ALL DOORS HAVE FREE EGRESS FROM BUILDING.

BLDG 2440/2441/2442 FIRE ALARM SYSTEM LEGEND

QTY	SYMBOL	DEVICE	PART NUMBER	BACK BOX	MOUNTING SPECIFICATIONS
2	FACP	FIRE ALARM CONTROL PANEL	NFS2-640	SBB-D4 BLDG 2440/2441 SBB BLDG 2442	SURFACE
1	TR	FIRE ALARM TRANSCEIVER	MONACO BT-XF		SURFACE
1	FAA	FIRE ALARM ANNUNCIATOR PANEL	LCD-80	AFB-1DB	MOUNT 56" TO TOP
10	F	ADDRESSABLE MANUAL PULL STATION	NBG-12LX	4" SQ 1 GANG RING	MOUNT AT 48" TO CENTER
2	F WP	ADDRESSABLE MANUAL PULL STATION	NBG-12LOB/ FMM-101	SB10	MOUNT AT 48" TO CENTER
6	S	INTELLIGENT ADDRESSABLE SMOKE DETECTOR	FSP-851/B710LP	4" SQUARE	CEILING FLUSH MOUNT
2	D S	INTELLIGENT ADDRESSABLE DUCT PHOTO DETECTOR S= SUPPLY	DNR/FSP-851/ST5		SURFACE MOUNT TO DUCT
2	T	REMOTE TEST/INDICATOR	RTS 157 KEY	4" SQ 1-GANG RING	
2	R	ADDRESSABLE RELAY MODULE	FRM-1	4" SQ 2.125" DEEP	
5	M	ADDRESSABLE MONITOR MODULE	FMM-1	4" SQ 2.125" DEEP	
3	D	ADDRESSABLE DUAL MONITOR MODULE	FDM-1	4" SQ 2.125" DEEP	
10	S	WALL MOUNT CLEAR SPEAKER STROBE-ALERT	SPSW-ALERT	4" SQUARE W/1.5" EXT RING	MOUNT AT 80" A.F.F. TO BOTTOM
24	SP	CEILING MOUNT SPEAKER CLEAR STROBE-ALERT	SPSCW-ALERT	4" SQUARE W/1.5" EXT RING	CEILING MOUNT
4	WP SP	CEILING MOUNT SPEAKER CLEAR STROBE-ALERT	SPSCWK-ALERT	PWBBCW INCLUDED	MOUNT TO BOTTOM OF 8" BEAM AT 22' AFF
7		WALL MOUNT CLEAR STROBE-ALERT	SW-ALERT	4" SQUARE	MOUNT AT 80" A.F.F. TO BOTTOM
1	WP	WALL MOUNT CLEAR STROBE-WEATHER PROOF-ALERT	SWK	WPBB	MOUNT AT 80" A.F.F. TO BOTTOM
5	S	SPEAKER	SPC	4" SQUARE W/1.5" EXT RING	CEILING MOUNT
12	S WP	SPEAKER-WEATHERPROOF	ET-1010W	WBB	MOUNT AT 96" A.F.F. TO BOTTOM
2	SS	SURGE SUPPRESSOR-AC	HSP-121BT1		
4	SS	SURGE SUPPRESSOR	PC642/PCB1B		
8	TS	SPRINKLER SYSTEM TAMPER SWITCH	CONNECTION ONLY		
3	FS	SPRINKLER SYSTEM FLOW SWITCH	CONNECTION ONLY		

BLDG 2440/2441/2442 WIRING LEGEND

SYMBOL	DESCRIPTION	WIRE SIZE
A	SLC - SIGNALING LINE CIRCUIT	16 AWG TWISTED PAIR FPLR - RED BELDEN 5220UJ, WEST PENN D990 OR EQUAL
B	SPEAKER CIRCUIT	16 AWG TWISTED PAIR FPLR - YELLOW BELDEN 5220UL, WEST PENN 990 OR EQUAL
C	STROBE CIRCUIT	2 #14 THHN RED (+) AND BLACK (-)
D	24VDC	16 AWG TWISTED PAIR FPLR BELDEN 5220UL, WEST PENN 990 OR EQUAL
E	ANNUNCIATOR DATA	16 AWG TWISTED, SHIELDED PAIR FPLR BELDEN 5220FL, WEST PENN 991 OR EQUAL

NOTE: ALL CONDUCTORS SHALL BE SOLID COPPER WITH THE EXCEPTION OF SPEAKER CIRCUITS AND THOSE CIRCUITS REQUIRING SHIELDING.

NICET CERTIFICATION
LARRY K. COOK
LEVEL IV / CERTIFICATION #75228
FIRE ALARM PROTECTION / FIRE ALARM SYS
EXPIRATION DATE: MARCH 01,2011

AS-BUILT
6-4-2010

SYM	DESCRIPTION	DATE	APPR
	REVISED PER URS AND NAVFAC COMMENTS	2/26/2010	

NAVFAC

SEAL

DES: DRW:
REVIEWED BY: R. WILTSE
PM/DM: T. ARTRIP
CHIEF ENG/ARCH: P. DAMMON

DEPARTMENT OF THE NAVY
NAVAL FACILITIES ENGINEERING COMMAND
IPT SOUTH ATLANTIC
NAVAL FACILITIES ENGINEERING COMMAND SOUTHEAST
NAVAL AIR STATION JACKSONVILLE
JOHN C. STENNIS SPACE CENTER MISSISSIPPI
SOF RIVERINE AND COMBATANT CRAFT OPERATIONS FACILITY
FIRE ALARM LEGEND AND RISERS

CODE ID. NO. N4412 SIZE D
SCALE: NONE
MAXIMO NO. ######
STA. PROJ. NO. P-210
WORK ORDER NO. 510247
CONSTR. CONTR. NO. N62467-05-D-0096
NAVFAC DRAWING NO. ######-##-#-####
SHEET XXX OF XXX

FA1.0

DRAWFORM REVISION: 01 JAN 2009

REV/DATE: FILE NAME: C:\Schlafly ENGR\08010 SOF Riverine\Drawings\Elec\5-As-builts\ACC\10-06-04\FAS Drawings as-builts.dwg LAYOUT NAME: FA1.0 PLOTTED: Wednesday, June 09, 2010 - 1:05pm