DAMIEN W. SERAUSKAS, P.E.
PROFESSIONAL ENGINEERING SERVICES
15 CYPRESS POINT LANE NEW ORLEANS, LA 70131
VOICE: (504)-866-2600 FAX: (504)-218-8480

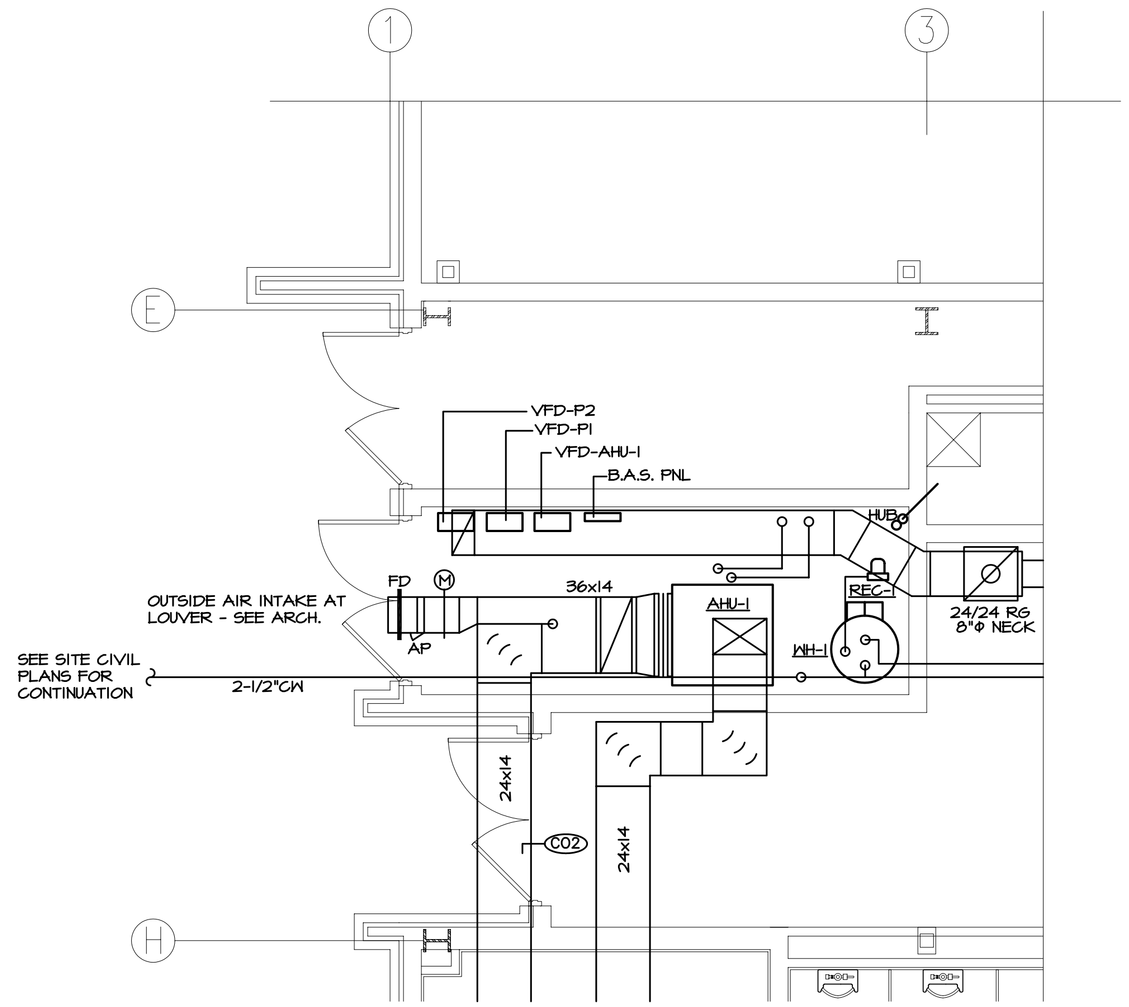

ENLARGED MECHANICAL ROOM PLAN - FIRST FLOOR
SCALE: 1/4"=1'-0"
M1.1 1 M3.1

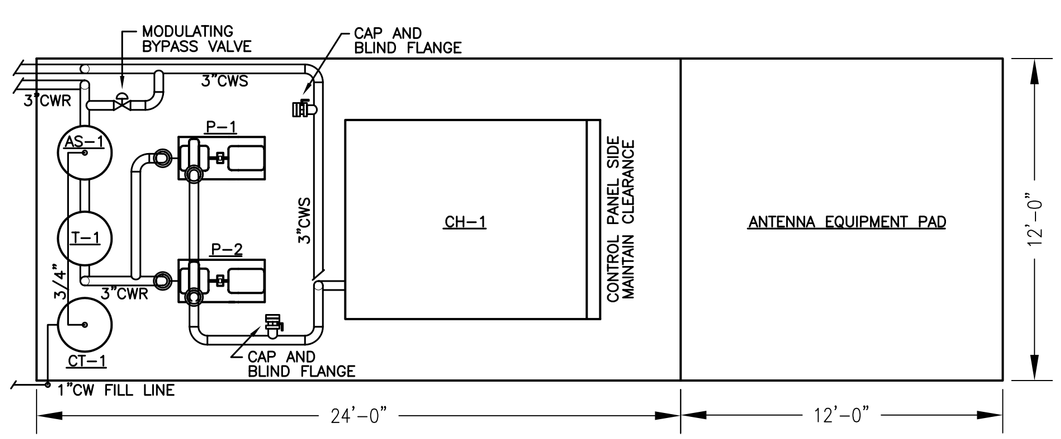

ENLARGED MECHANICAL EQUIPMENT YARD
SCALE: 1/4"=1'-0"
M1.1 3 M3.1

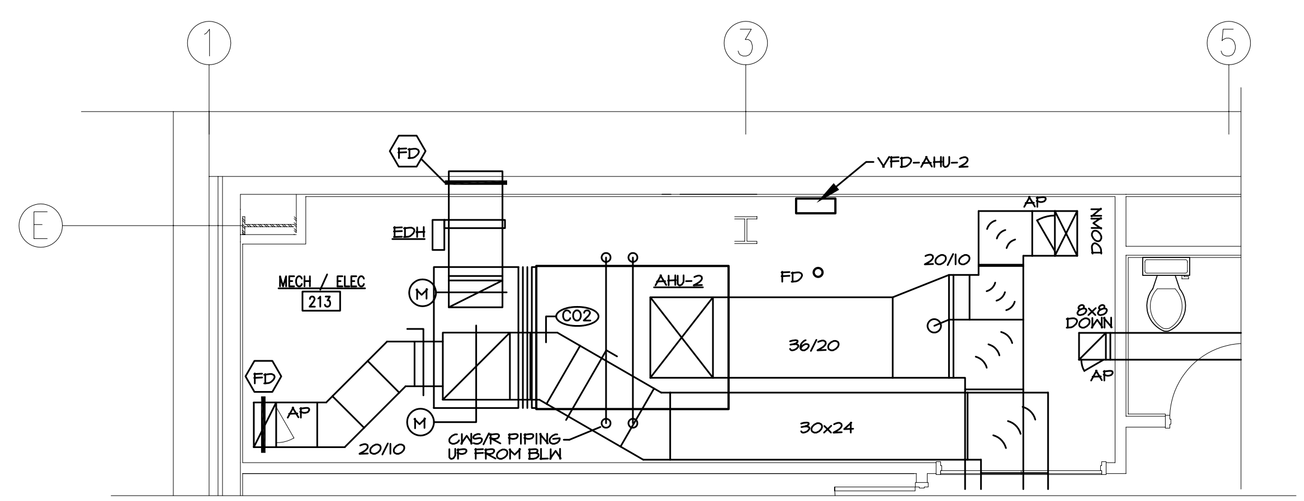

ENLARGED MECHANICAL ROOM PLAN - SECOND FLOOR
SCALE: 1/4"=1'-0"
M1.2 2 M3.1

SYM	DESCRIPTION	DATE	APPR

NAVFAC

DAMMON ENGINEERING, INC.
CHIEF ENGINEER EMMETT DAMMON, P.E. — CHIEF ARCHITECT ROBERT WILTSE
1095 FLORIDA AVENUE
SLIDELL, LA 70458
(985) 649-5832
MAY 15, 2009

STATE OF LOUISIANA
DAMIEN W. SERAUSKAS
REG. No. 28519
REGISTERED PROFESSIONAL ENGINEER IN MECHANICAL ENGINEERING
SEAL

REVIEWED BY: D. SERAUSKAS
PM/DM: T. ARTRIP
CHIEF ENG/ARCH. D.SERAUSKAS

DEPARTMENT OF THE NAVY
NAVAL FACILITIES ENGINEERING COMMAND SOUTHEAST
IPT SOUTH ATLANTIC
NAVAL FACILITIES ENGINEERING COMMAND
NAVAL AIR STATION JACKSONVILLE
JOHN C. STENNIS SPACE CENTER MISSISSIPPI
SOF RIVERINE AND COMBATANT CRAFT OPERATIONS FACILITY
ENLARGED PLANS AND DETAILS

CODE ID. NO: N4412 | SIZE D
SCALE: AS NOTED
MAXIMO NO. #####
STA. PROJ. NO. #-####
WORK ORDER NO. #####
CONSTR. CONTR. NO. N62467-05-D-0096
NAVFAC DRAWING NO. #####-#-#-####
SHEET ### OF ###
M3.1

DRAWFORM REVISION: 01 JAN 2009

REVDATE: FILE NAME: C:\Stennis Riverine Facility\Stennis Mech Master.dwg LAYOUT NAME: M3.1 PLOTTED: Wednesday, May 06, 2009 - 10:21am