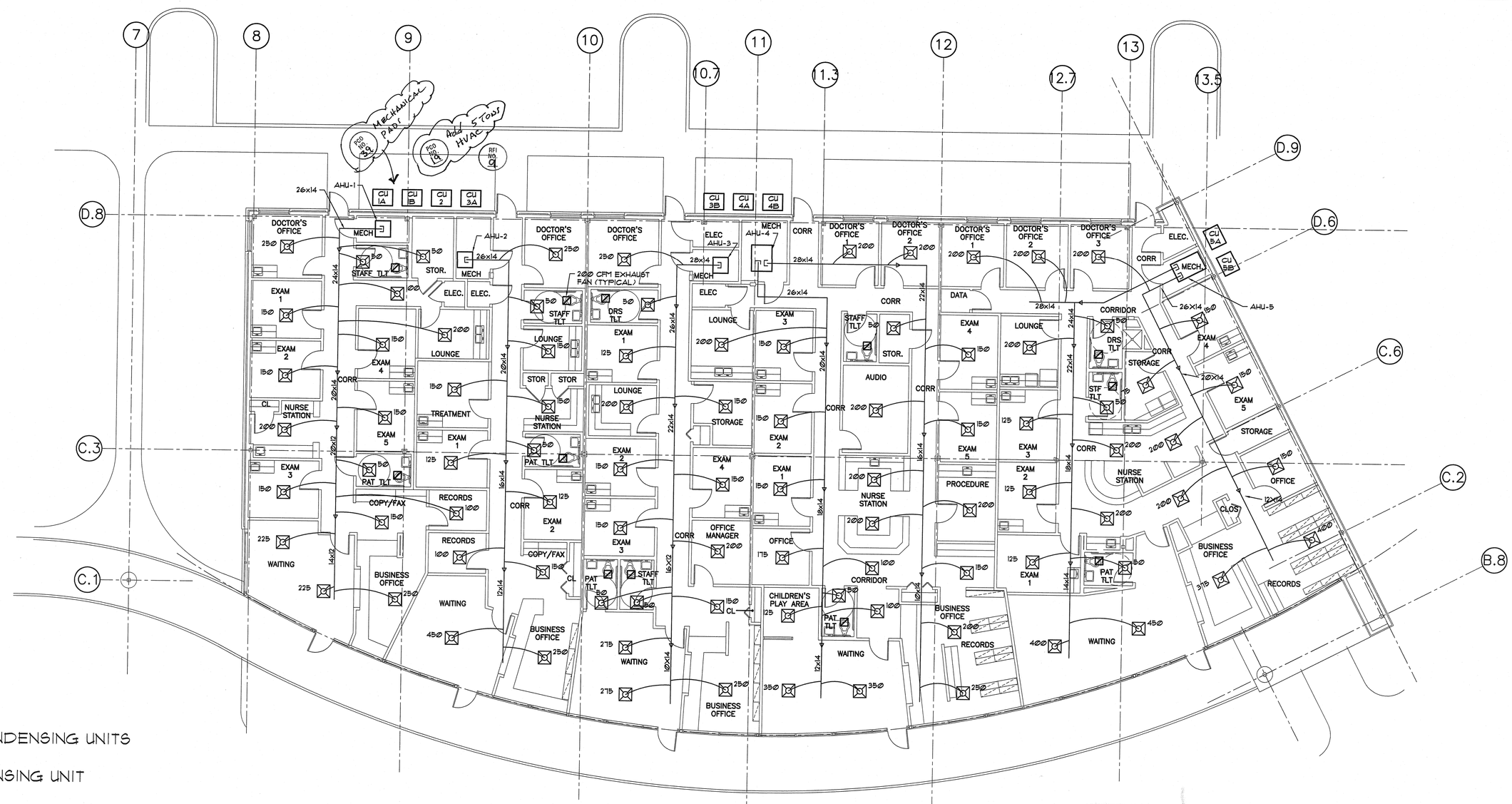

FIRST FLOOR PLAN - HVAC

1/8" = 1'-0"

RFI NO. 9 — RFI ROZASWAR GIBBS 00009 — Wheeler RFI #7 HVAC Locations — CLO 6/6/2002 6/13/2002 6/13/2002

The location shown on sheet M-2R (revised on 5/8/02) is not recommended. The units are too close to the building and too close to each other. For proper functioning, these units need to breathe. One possible suggestion is sketched on the attached marked up M-2R. Please specify where these condensing units should be located.

Contractor shall locate condensing units per referenced "marked up" M-2R with the following exception:

Center CU3A & CU3B on either side of column line 10.

RFI NO. 12 — RFI ROZASWAR GIBBS 00012 — HVAC - Design Clarification — CLO 6/22/2002 6/29/2002 6/29/2002

Please see the attached HVAC design clarification as understood per Wheeler Plbg based upon previous meetings. Please approve or approve with comment.

HVAC concept is approved as per attached letter from Don Wheeler Plumbing, L.L.C. dated March 26, 2002.

EQUIPMENT SCHEDULE

AHU-1	7½ TONS WITH 2- 4 TON CONDENSING UNITS
AHU-2	5 TONS WITH 5 TON CONDENSING UNIT
AHU-3	7½ TONS WITH 2- 4 TON CONDENSING UNITS
AHU-4	10 TONS WITH 2- 5 TON CONDENSING UNITS
AHU-5	10 TONS WITH 2- 5 TON CONDENSING UNITS

TOTAL OF 40 TONS

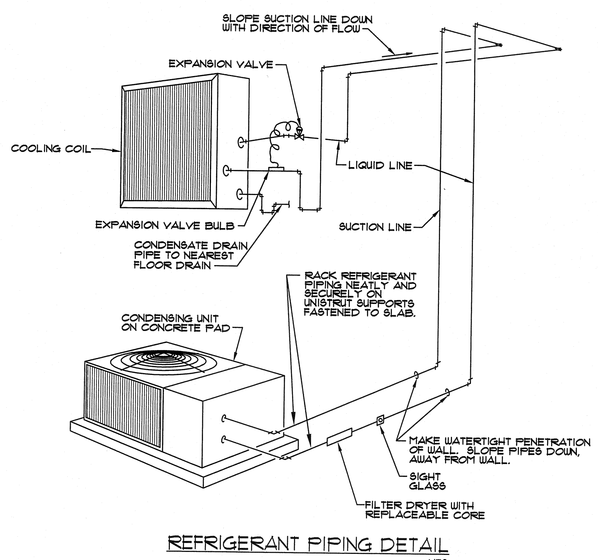

REFRIGERANT PIPING DETAIL

NTS

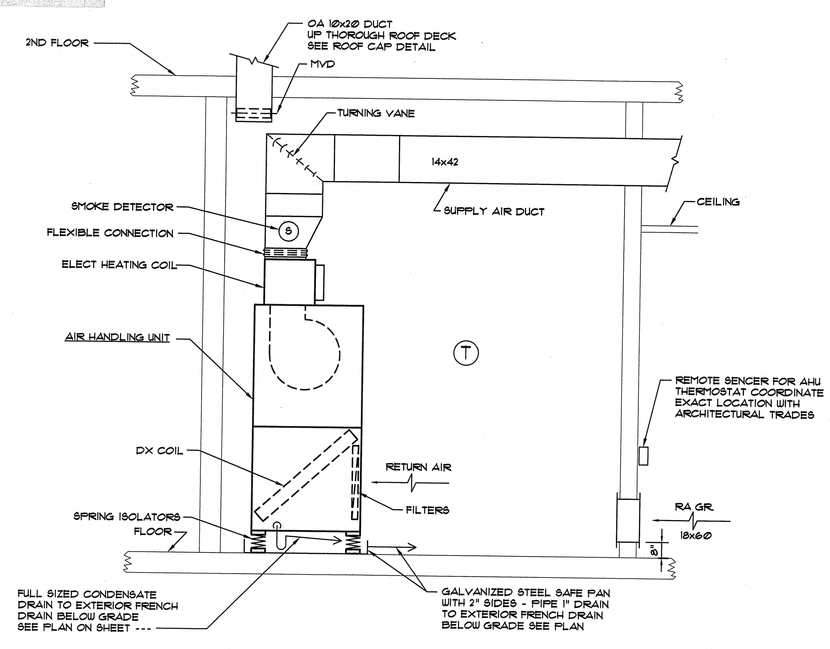

NOTE:

1. MECHANICAL EQUIPMENT ROOMS @ GROUND LEVEL.
2. BOTH MECHANICAL ROOM ARE SIMILAR.

AIR HANDLING UNIT INSTALLATION DETAIL

NTS

DIFFUSER SCHEDULE

CFM RANGE	NECK SIZE	FLEX SIZE	MAX FLEX LENGTH	NOTES
0 - 100	9X9	6"ø	12'	1, 2
101 - 200	12X12	8"ø	12'	
201 - 300	12X12	12"ø	12'	
301 - 400	15X15	12"ø	12'	
401 - 550	18X18	14"ø	12'	

1. SIZES BASED ON TITUS MODEL TDGA-AA ALL ALUMINUM ADJUSTABLE DIFFUSER
2. FURNISH WITH SQUARE TO ROUND TRANSITION - FRAME STYLE TO SUIT CEILING

DOOR GRILLE SCHEDULE

CFM RANGE	DOOR GRILLE SIZE	NOTES
0 - 100	UNDERCUT DOOR 3/4"	
101 - 200	UNDERCUT DOOR 1"	
201 - 350	22X10	1, 2
351 - 500	24X12	1, 2
501 - 700	24X16	1, 2

1. SIZES BASED ON TITUS MODEL T-700L STEEL SIGHT PROOF DOOR GRILLE
2. FURNISH WITH BORDER TYPE 1 WITH AUXILLIARY FRAME

RFI NO. 6

Date: June 28, 2002 Scale: nts	DWG: SK-M-2	Medical Office Building Slidell, Louisiana	ROZAS·WARD a.i.a. architects

Date: APRIL 24, 2002
Drawn By: UD
Checked By: EMH
Revisions:
1 05-08-02

Project Number: 00015

This drawing is the property of ROZAS-WARD/a.i.a. architects, and is not to be reproduced or copied in whole or in part. It is only to be used for the project and site specifically identified herein.

Scales as stated hereon are valid on the original drawing only.

ROZAS·WARD/a.i.a. architects
a professional corporation
1010 Common Street · Suite 2750 · New Orleans, Louisiana 70112 · (504)524-4375

Medical Office Building
Slidell, Louisiana

AS-BUILT DWG.
Gibbs Construction

M-2R

drawing first floor plan
set no.