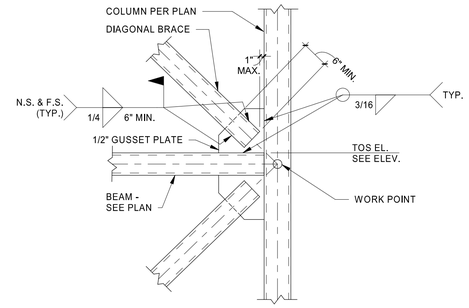

10 DETAIL
3/4" = 1'-0"

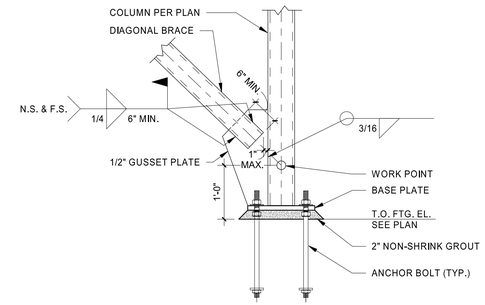

9 DETAIL
3/4" = 1'-0"

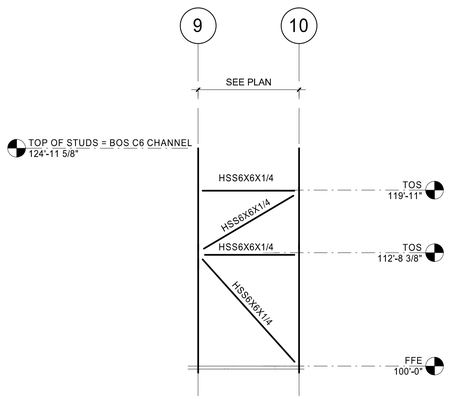

8 ELEVATION ALONG GRID J
1/8" = 1'-0"

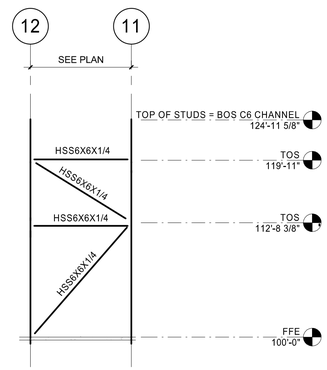

7 ELEVATION ALONG GRID A
1/8" = 1'-0"

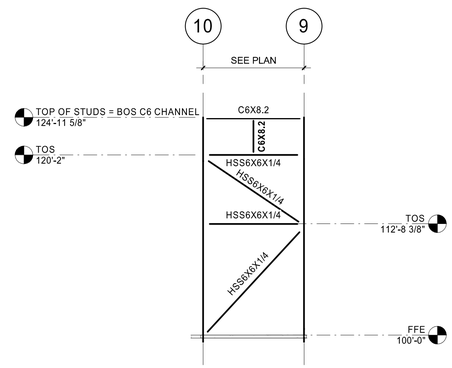

6 ELEVATION ALONG GRID L
1/8" = 1'-0"

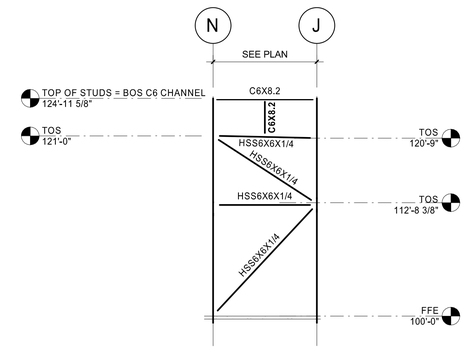

5 ELEVATION ALONG GRID 9
1/8" = 1'-0"

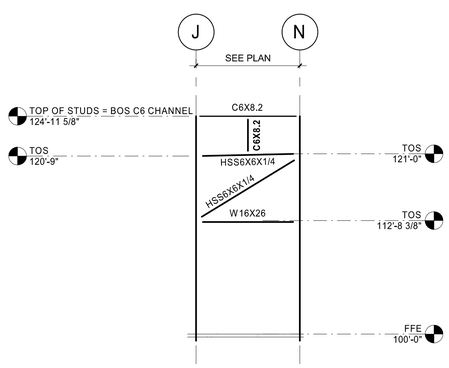

4 ELEVATION ALONG GRID 10
1/8" = 1'-0"

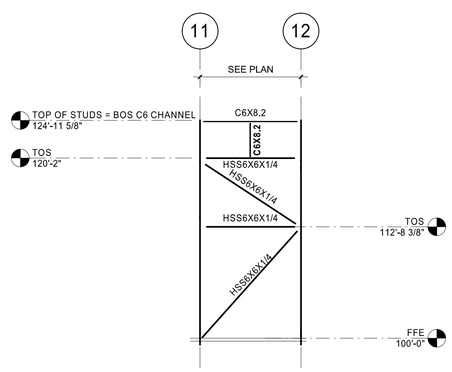

3 ELEVATION ALONG GRID 0.A
1/8" = 1'-0"

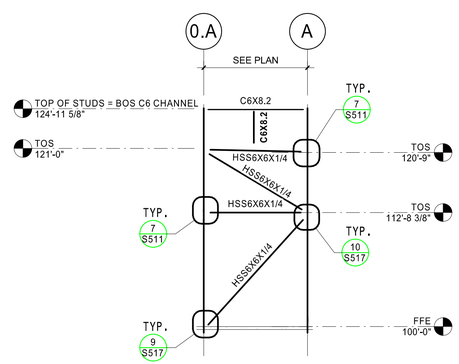

2 ELEVATION ALONG GRID 12
1/8" = 1'-0"

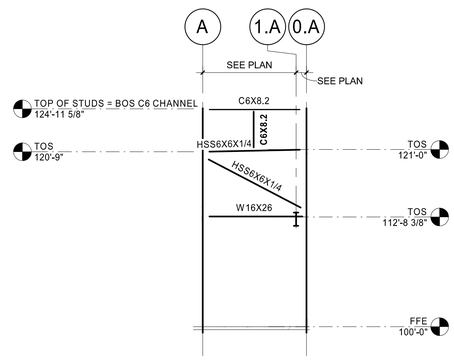

1 ELEVATION ALONG GRID 11
1/8" = 1'-0"

HFA
HARRISON FRENCH & ASSOCIATES, LTD
t 479.273.7780
1705 S. Walton Blvd., Suite 3
Bentonville, Arkansas 72712
www.hfa-ae.com

STIPULATION FOR REUSE
THIS DRAWING WAS PREPARED FOR LOVE'S COUNTRY STORES NICHOLSON, MS
CONTRACT NUMBER: 1 SITE: NICHOLSON, MS
DATE ON: 3/09/23 AND IT IS NOT INTENDED FOR USE ON ANY PROJECT SITE OR AT A LATER TIME
BUT IS SUBJECT TO REUSE FOR REFERENCE OR EXAMPLE ON ANOTHER PROJECT
LICENSED ARCHITECTS AND ENGINEERS. REPRODUCTION OF THIS DRAWING FOR USE ON ANOTHER PROJECT IS NOT AUTHORIZED AND MAY BE CONTRARY TO THE LAW.

Love's
STORE NUMBER: 860
I-59, EXIT 1
NICHOLSON, MS 39463
JOB NUMBER: 03-22-30/03

ISSUE BLOCK

CHECKED BY:	LST
DRAWN BY:	CRM
DOCUMENT DATE:	02/06/23

LINGSHEN TSAO
LICENSED PROFESSIONAL ENGINEER
20847
STATE OF MISSISSIPPI
2023.02.06 14:07:06-06'00'

FRAMING ELEVATIONS AT TOWERS

SHEET:
S517

2/3/2023 9:37:39 AM
C:\Users\chuck.may\Documents\2021 Revit Projects\Loves_Nicholson_MS_STR_T2_R0_v21_HFA Chuck.May.rvt
2305-S511-FRAMING ELEVATIONS AT TOWERS