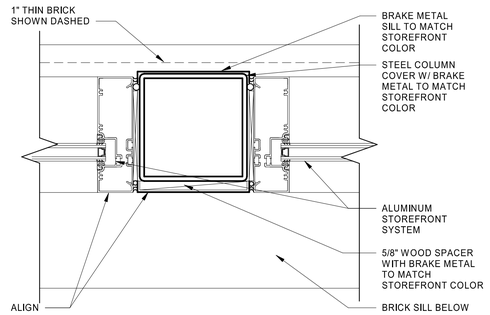

14 STOREFRONT COLUMN DETAIL
3" = 1'-0"

13 NOT USED
3" = 1'-0"

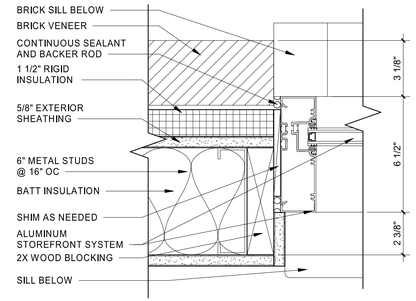

10 STOREFRONT JAMB DETAIL
3" = 1'-0"

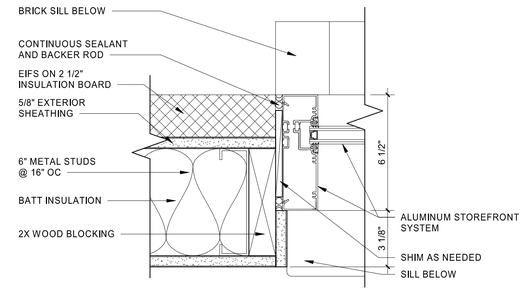

9 STOREFRONT JAMB DETAIL
3" = 1'-0"

12 NOT USED
3" = 1'-0"

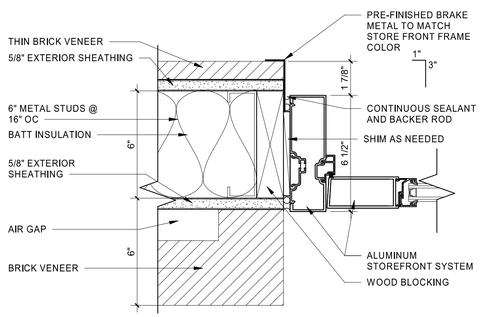

8 STOREFRONT JAMB DETAIL
3" = 1'-0"

11 NOT USED
3" = 1'-0"

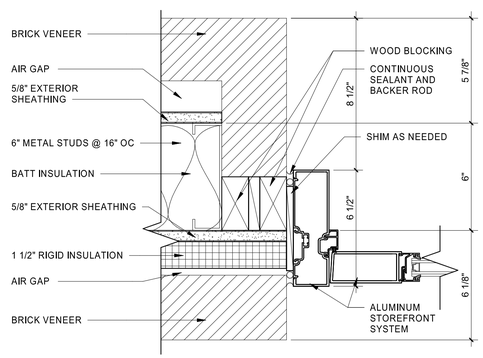

7 STOREFRONT JAMB DETAIL
3" = 1'-0"

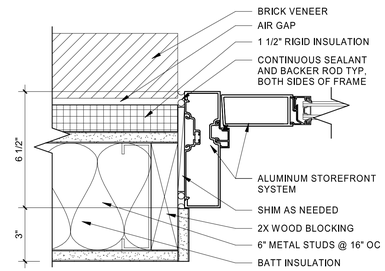

6 STOREFRONT JAMB DETAIL
3" = 1'-0"

5 NOT USED
3" = 1'-0"

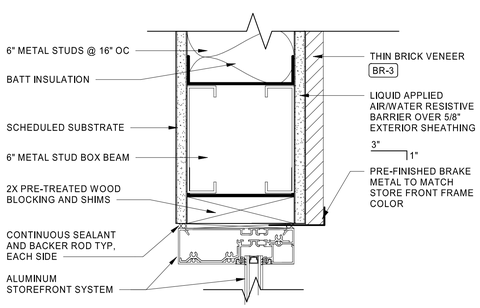

4 STOREFRONT HEADER - THIN BRICK
3" = 1'-0"

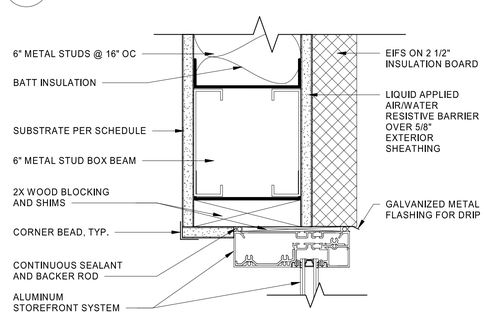

3 STOREFRONT HEADER
3" = 1'-0"

2 NOT USED
3" = 1'-0"

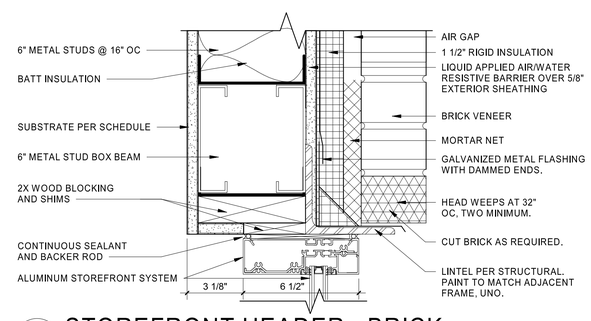

1 STOREFRONT HEADER - BRICK
3" = 1'-0"

HFA
HARRISON FRENCH & ASSOCIATES, PLLC
t 479.273.7780
1705 S. Walton Blvd., Suite 3
Bentonville, Arkansas 72712
www.hfa-ae.com

STIPULATION FOR REUSE
THIS DRAWING WAS PREPARED FOR USE IN CONNECTION WITH LOVE'S NICHOLSON, MS CONSTRUCTION WORKS WITH ITS ISSUE DATE ON 2/06/23 AND IT IS NOT INTENDED FOR USE ON OTHER PROJECT SITES OR AT A LATER TIME EXCEPT THAT THE ARCHITECT RETAINS OR EXAMPLE ON ANOTHER PROJECT. REPRODUCTION OF THIS DRAWING BY LICENSED ARCHITECTS AND ENGINEERS IS PROHIBITED WITHOUT THE WRITTEN AUTHORIZED AND MAY BE CONTRARY TO THE LAW.

STORE NUMBER: 860
I-59, EXIT 1
NICHOLSON, MS 39466
JOB NUMBER: 03-23-30009
T1-180

ISSUE BLOCK

CHECKED BY:	MAP
DRAWN BY:	ASE
DOCUMENT DATE:	02/06/23
PROTO:	T1-180
PROTO CYCLE:	Q4 - 2022

REGISTERED ARCHITECT
BOGUE L. EBBRECHT
4925
STATE OF ARKANSAS
Bogue Louis Ebbrecht

Digitally signed by Bogue Louis Ebbrecht
DN: cn=Bogue Louis Ebbrecht, c=US, o=Harrison French and Associates, L=Bentonville, S=ARKANSAS, C=US
Date: 2023.02.07 15:54:46-06'00'

STOREFRONT HEAD & JAMB DETAILS

SHEET:
A612

2/6/2023 9:31:23 PM
C:\Users\mayssa.pranger\Documents\2021 Revit Projects\Loves_Nicholson_MS_ARC_T2_180_v21_HFA Mayssa Pranger.rvt
2300-4412-STOREFRONT HEAD & JAMB DETAILS