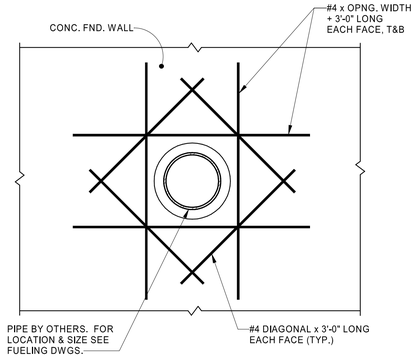


## 12 FND. WALL OPNG. PIPE SLEEVE REINF. DETAIL
3/4" = 1'-0"

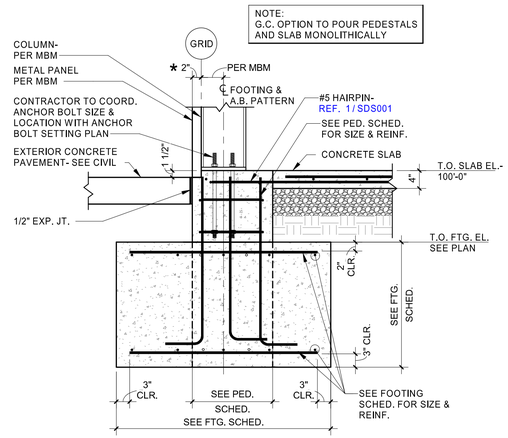


## 11 SECTION AT 4" SLAB
3/4" = 1'-0"

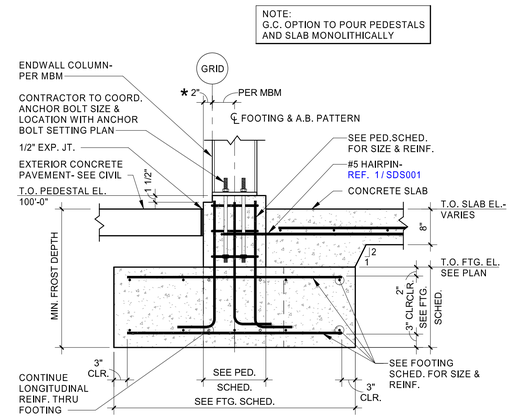


## 10 SECTION AT 8" SLAB
3/4" = 1'-0"

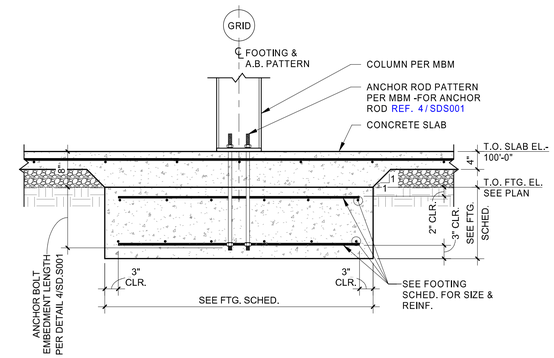


## 9 SECTION AT 4" SLAB
3/4" = 1'-0"

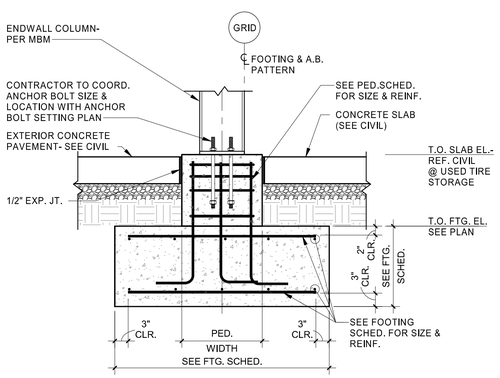


## 8 SECTION AT FENCED AREA
3/4" = 1'-0"

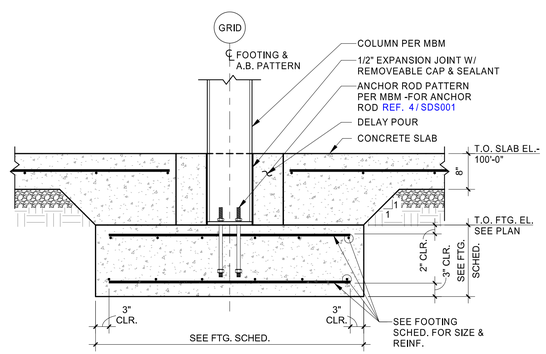


## 7 SECTION AT 8" SLAB
3/4" = 1'-0"

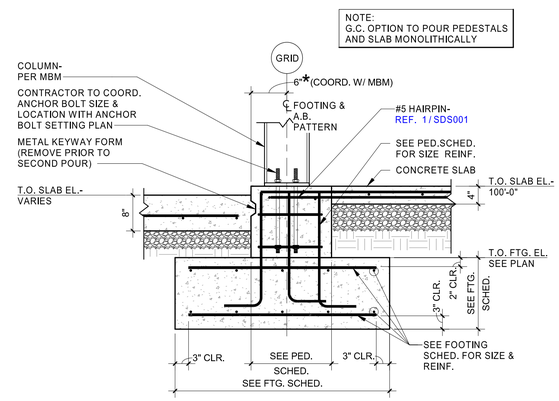


## 6 SECTION AT 4" TO 8" SLAB TRANSITION
3/4" = 1'-0"

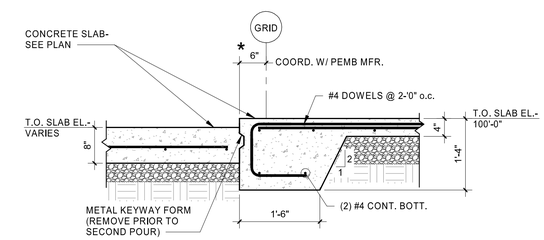


## 5 SECTION 4" TO 8" TRANSITION
3/4" = 1'-0"

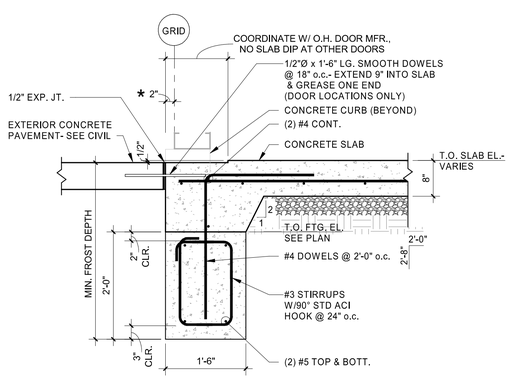


## 4 SECTION AT 8" SLAB
3/4" = 1'-0"

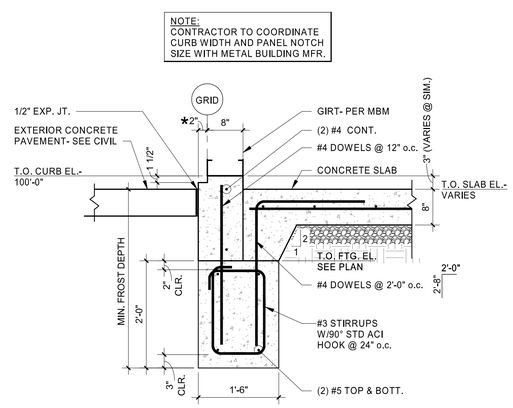


## 3 SECTION AT 8" SLAB
3/4" = 1'-0"

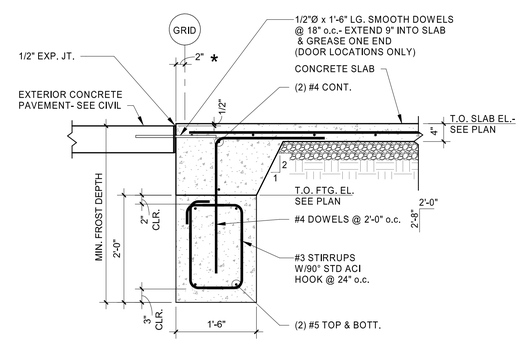


## 2 SECTION AT 4" SLAB
3/4" = 1'-0"

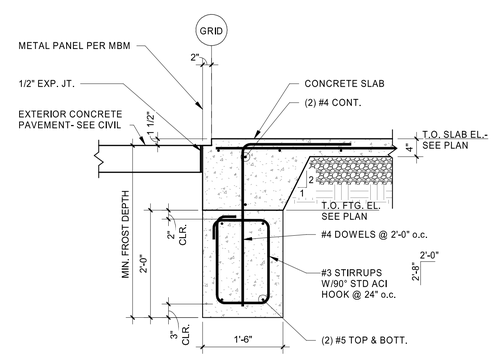


## 1 SECTION AT 4" SLAB
3/4" = 1'-0"


HFA
HARRISON FRENCH & ASSOCIATES, LTD
t 479.273.7780
1705 S. Walton Blvd., Suite 3
Bentonville, Arkansas 72712
www.hfa-ae.com



STIPULATION FOR REUSE
THIS DRAWING WAS PREPARED FOR USE IN CONNECTION WITH THE NICHOLSON, MISSISSIPPI LOVE'S FUEL STATION. IN ITS ISSUE DATE ON 3/09/23, AND IT IS NOT INTENDED FOR USE ON ANY OTHER PROJECT SITE OR AT A LATER TIME. THE USE OF THIS DRAWING FOR REFERENCE OR EXAMPLE ON ANOTHER PROJECT BY ANYONE OTHER THAN THE LICENSED ARCHITECTS AND ENGINEERS, REPRODUCTION OF THIS DRAWING FOR ANY PURPOSE WHATSOEVER IS NOT AUTHORIZED AND MAY BE CONTRARY TO THE LAW.


STORE NUMBER: 860
I-59, EXIT 1
NICHOLSON, MS 39463
JOB NUMBER: 03-23-30/03

ISSUE BLOCK

| | |
|---|---|
| CHECKED BY: | LST |
| DRAWN BY: | CRM |
| DOCUMENT DATE: | 02/06/23 |

LUNGSHEN TSAO LICENSED PROFESSIONAL ENGINEER 20847 STATE OF MISSISSIPPI
2023.02.06 10:20:57-06'00'

FOUNDATION DETAILS

SHEET: SDS401

2/3/2023 9:32:45 AM
C:\Users\chuck.may\Documents\2021 Revit Projects\Loves_Nicholson_MS_STR_SPREDDCD_4B_v21_HFA Chuck.May.rvt
B916-SDS401-FOUNDATION DETAILS