SIDEWALKS:

1) ALL SIDEWALKS SHALL BE CONSTRUCTED OF PORTLAND CEMENT CONCRETE WITH A COMPRESSIVE STRENGTH OF 2,000 P.S.I. AT TWENTY-EIGHT DAYS AND A MINIMUM THICKNESS OF FIVE INCHES.
2) ALL SIDEWALKS TO HAVE A WIDTH OF FIVE FEET AND SHALL BE CONSTRUCTED AS PER THE LOCATION SHOWN ON THE SITE PLAN.
3) ALL SIDEWALKS SHALL BE SCORED TO A DEPTH OF 3/4" AT FOUR FOOT INTERVALS WITH EXPANSION JOINTS PLACED AT TWENTY FOOT INTERVALS.
4) EXPANSION JOINTS SHALL BE CONSTRUCTED OF 1/2" THICK PRE-MOLDED EXPANSION MATERIAL WITH ALL CORNERS TO BE FORMED BY EXPANSION JOINTS.
5) ANY SIDEWALK OR ROUTE THAT IS NOT AT A LEVEL ELEVATION AT IT'S INTERSECTION WITH A DRIVEWAY OR STREET WILL BE REQUIRED TO INSTALL A CURB RAMP AT A MAXIMUM SLOPE OF 1:12 WITH A MAXIMUM RISE OF 30" AND A MINIMUM LEVEL STRAIGHT CURB SEGMENT OF 48".
6) THE TEXTURE OF THE DRIVEWAY AND INTERSECTION HANDICAP RAMPS SHALL BE CONSTRUCTED OF A NON-SLIP SURFACE. ACCOMPLISHED BY "BROOMING" THE RAMP SURFACE AND GROOVING 2-3 INCH SPACING AT RIGHT ANGLE DIRECTIONS. GROOVES TO BE APPROXIMATELY 1/4" DEEP x 1/8" WIDE.
7) ALL SIDEWALKS SHALL BE SLOPED 1" TOWARDS THE ADJANCENT STREET OR DRIVEWAY.
8) CONTRACTOR SHALL CONTACT THEIR REGULATORY DEPARTMENT OF ENGINEERING PRIOR TO ANY WORK BEING DONE WITHIN THE PARISH OR CITY RIGHT OF WAY OR SERVITUDE.

DRIVEWAYS:

1) ALL DRIVEWAYS BETWEEN STREET AND PROPERTY LINE SHALL BE CONSTRUCTED OF PORTLAND CEMENT CONCRETE WITH A COMPRESSIVE STRENGTH OF 4,000 P.S.I. AT TWENTY-EIGHT DAYS AND A MINIMUM THICKNESS OF 6".
2) ALL DRIVEWAYS BETWEEN STREET AND PROPERTY LINE CONNECTING WITH AN EXISTING ROADWAY SHALL BE CONSTRUCTED IN ACCORDANCE WITH THE DETAIL PROVIDED ON PAVING PLAN.
3) EXACT LOCATIONS OF ROADWAY AND DRIVEWAY CURBING WILL BE DETERMINED IN THE FIELD BY A REPRESENTATIVE OF THE REGULATORY DEPARTMENT OF ENGINEERING.
4) CONTRACTOR SHALL CONTACT THEIR REGULATORY DEPARTMENT OF ENGINEERING PRIOR TO THE FORMING OF DRIVEWAYS CONNECTING TO THE ROADWAY.

PARKING LOTS:

1) PARKING STALLS MUST BE STRIPED WITH A 4" WIDE CONTRASTING STRIPE (YELLOW ON CONCRETE, AND YELLOW OR WHITE ON ASPHALT PARKING LOTS).
2) HANDICAP PARKING SPACES TO BE DESIGNATED BY BLUE STRIPING AND EITHER A BLUE SYMBOL ONA WHITE BACKGROUND, OR A WHITE SYMBOL ON A BLUE BLACKGROUND. HANDICAP PARKING STALLS REQUIRE THE INSTALLATION OF PROPER SIGNAGE.
3) ALL WHEEL STOPS AND CONCRETE CURBS SHALL BE CONSTRUCTED IN ACCORDANCE WITH THE DETAILS PROVIDED ON THE PAVING PLAN.
4) ALL PARKING SPACES TO BE LAID OUT AS SHOWN ON THE PAVING PLANS, UNLESS OTHERWISE INDICATED.

DRAINAGE:

1) CONCRETE STRENGTH TO BE 4,000 P.S.I. MINIMUM AT TWENTY-EIGHT DAYS.
2) WHEN BOX IS 7'-0" OR LESS IN HEIGHT USE ONE LAYER OF BRICK. WHEN BOX IS 7'-0" BUT LESS THAT 12'-0" IN HEIGHT USE TWO LAYERS OF BRICK.
3) ALL MASONRY TO BE LAID WITH RUNNING BOND AND HEADER COURSE (EVERY FOURTH LAYER).
4) ALL WALLS TO BE PLASTERED 1/2" THICK INSIDE AND OUTSIDE.
5) 12" LIMESTONE BEDDING FOUNDATION SHALL BE REQUIRED UNDER ALL MANHOLES AND BASINS.
6) WHEN THE DEPTH OF BOX OR MANHOLE IS 4'-0" OR GREATER THE INSTALLATION OF STEPS WILL BE REQUIRED IN ACCORDANCE WITH PUBLIC WORKS STANDARDS.
7) THE MINIMUM DRAIN SIZE ACCEPTABLE FOR ANY INSTALLATION ON PUBLIC RIGHT OF WAY SHALL BE 24" IN DIAMETER.
8) CONTRACTOR WILL CONTACT THEIR REGULATORY DEPARTMENT OF ENGINEERING PRIOR TO WORK DONE WITHIN THE PARISH, CITY RIGHT OF WAYS, OR SERVITUDES.

TRAFFIC CONTROLS:

ANY WORK WITHIN THE ROADWAY OR ADJACENT TO THE ROADWAY CAUSING AN INTERFERENCE TO VEHICULAR TRAFFIC REQUIRES PRIOR TO THE PARISH OR CITY TRAFFIC ENGINEERING DIVISION, AND MUST CONFORM TO THE REQUIREMENTS SET FORTH BY THE UNIFORM MANUAL OF TRAFFIC CONTROL DEVICES OF THE STATE OF LOUISIANA. THE CONTRACTOR MUST FURNISH ALL NECESSARY TRAFFIC SIGNS AND/OR BARRICADES AND MAINTAIN THEM DURING CONSTRUCTION ACTIVITY.

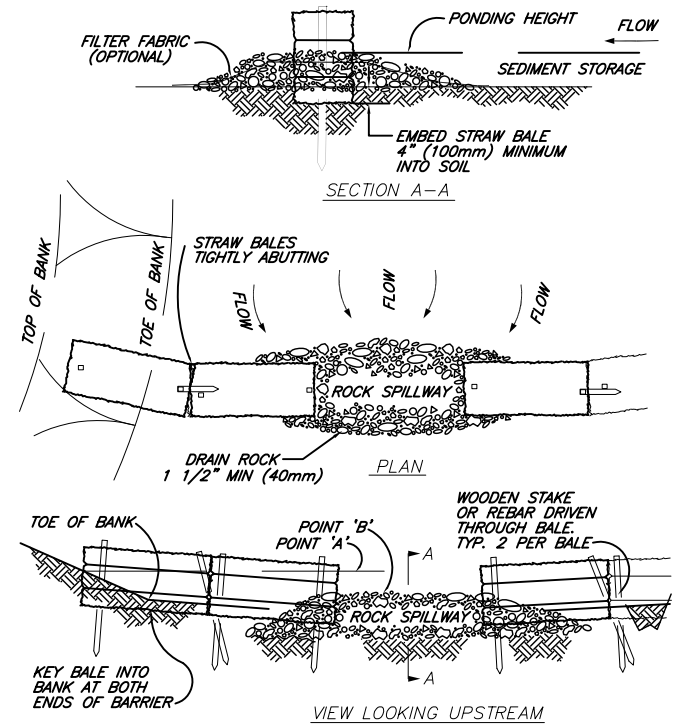

NOTES:
1. PLACE BALES PERPENDICULAR TO FLOW.
2. EMBED THE BALE 4" (100mm) INTO THE SOIL AND "KEY" THE END BALES INTO THE CHANNEL BANKS TO PREVENT FLOW AROUND THE BALES.
3. BALES PLACED IN A ROW WITH ENDS TIGHTLY ABUTTING.
4. POINT "A" SHALL BE HIGHER THAN POINT "B".
5. SPILLWAY HEIGHT SHALL NOT EXCEED 24" (0.6m).

SEMI–PERVIOUS STRAW BALE SEDIMENT BARRIER

N.T.S.

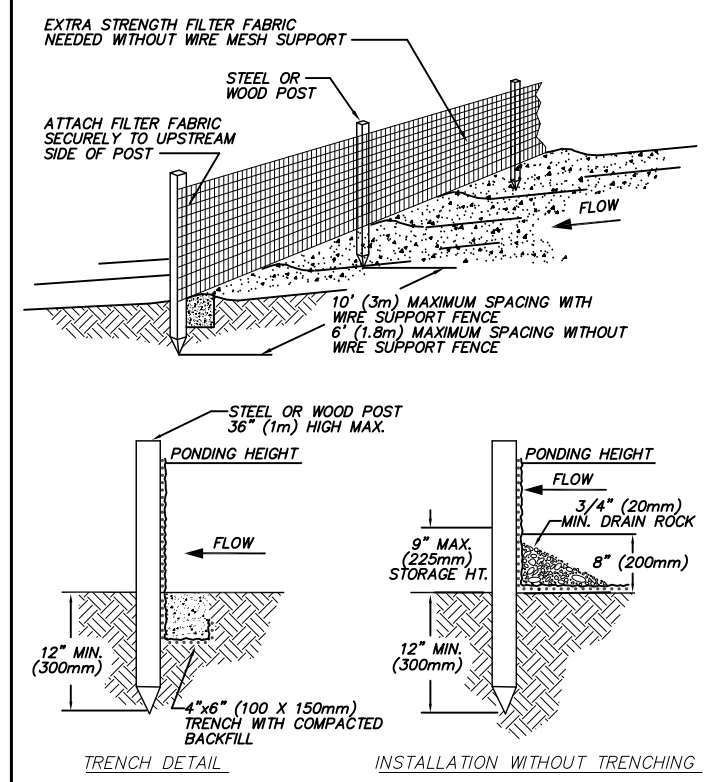

NOTES:
1. SILT FENCE SHALL BE PLACED ON SLOPE CONTOURS TO MAXIMIZE PONDING EFFICIENCY.
2. INSPECT AND REPAIR FENCE AFTER EACH STORM EVENT AND REMOVE SEDIMENT WHEN NECESSARY. 9" (225mm) MAXIMUM RECOMMENDED STORAGE HEIGHT.
3. REMOVED SEDIMENT SHALL BE DEPOSITED TO AN AREA THAT WILL NOT CONTRIBUTE SEDIMENT OFF–SITE AND CAN BE PERMANENTLY STABILIZED.

Silt Fence Detail

N.T.S.

METHOD FOR SILT FENCE INSTALLATION

1) THE BASE OF BOTH END POSTS MUST BE AT LEAST 2'-4" ABOVE THE TOP OF THE SILT FENCE FABRIC ON THE MIDDLE POSTS FOR DITCH CHECKS TO DRAIN PROPERLY. USE A HAND LEVEL OR STRING LEVEL, IF NECESSARY, TO MARK BASE POINTS BEFORE INSTALLATION.
2) INSTALL POSTS 3-4 FEET APART IN CRITICAL WATER RETENTION AREAS AND 6-7 FEET APART ON STANDARD APPLICATIONS.
3) INSTALL POSTS 24" DEEP ON THE DOWNSTREAM SIDE OF THE SILT FENCE, AND AS CLOSE AS POSSIBLE TO THE FABRIC, ENABLING POSTS TO SUPPORT THE FABRIC FROM UPSTREAM WATER PRESSURE.
4) INSTALL POSTS WITH THE NIPPLES FACING AWAY FROM THE SILT FENCE FABRIC.
5) ATTACH THE FABRIC TO EACH POST WITH THREE TIES, ALL SPACED WITHIN THE TOP 8" OF THE FABRIC. ATTACH EACH TIE DIAGONALLY 45° THROUGH THE FABRIC, WITH EACH PUNCTURE AT LEAST 1" VERTICALLY APART. ADDITIONALLY, EACH TIE SHOULD BE POSITIONED TO HANG ON A POST NIPPLE WHEN TIGHTENED TO PREVENT SAGGING.
6) WRAP APPROXIMATELY 6" OF FABRIC AROUND THE END POSTS AND SECURE WITH 3 TIES.
7) NO MORE THAN 24" OF A 36" FABRIC IS ALLOWED ABOVE GROUND LEVEL.
8) THE INSTALLATION SHOULD BE CHECKED AND CORRECTED FOR ANY DEVIATIONS BEFORE COMPACTION. USE A FLAT-BLADED SHOVEL TO TUCK FABRIC DEEPER INTO THE SILT IF NECESSARY.
9) COMPACTING IS VITALLY IMPORTANT FOR EFFECTIVE RESULTS. COMPACT THE SOIL IMMEDIATELY NEXT TO THE SILT FENCE FABRIC WITH THE FRONT WHEEL OF THE TRACTOR, SKID STEER, OR ROLLER EXERTING AT LEAST 60 PSI OF PRESSURE. COMPACT THE UPSTREAM SIDE FIRST, AND THEN EACH SIDE TWICE FOR A TOTAL OF FOUR TRIPS.

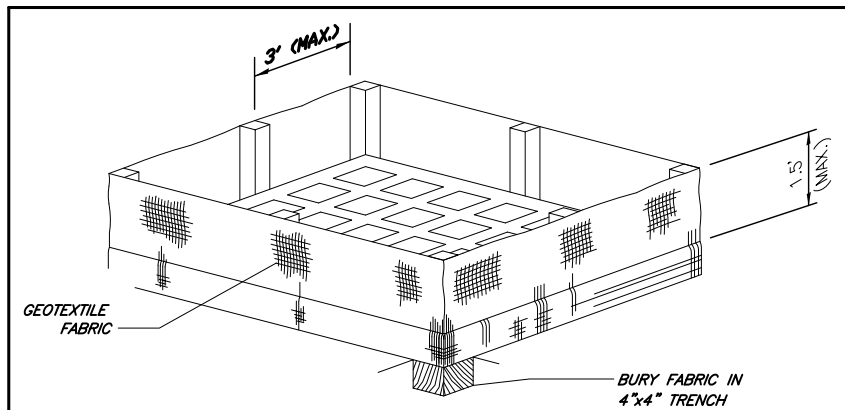

ISOMETRIC VIEW SHOWING GEOTEXTILE FABRIC

N.T.S.
(BACKFILL SOIL NOT SHOWN)

NOTES:

THE TEMPORARY DROP INLET SILT TRAP IS TO BE USED IN SMALL DRAINAGE AREAS (LESS THAN 1 ACRE) WHERE THE STORM DRAIN IS FUNCTIONAL BEFORE THE AREA IS STABILIZED. THE TRAP CAN BE EITHER GEOTEXTILE FABRIC OR HAY BALES.

1) THE GEOTEXTILE FABRIC SHALL CONFORM TO SECTION 1019 (TYPE G) OF THE LA DOTD STANDARD SPECIFICATIONS.
2) WOODEN STAKES SUPPORTING THE FABRIC SHALL BE SPACED AROUND THE INLET AT A MAXIMUM SPACING OF 3 FEET.
3) THE HEIGHT OF THE FABRIC ABOVE THE INLET SHALL BE LIMITED TO 1'-6" AND THE BOTTOM OF THE FABRIC SHALL BE BURIED IN A TRENCH APPROXIMATELY 4" WIDE BY 4" DEEP. THE FABRIC SHALL BE STAPLED TO POST WITH 1/2" STAPLES.
4) THE TRAP SHOULD BE INSPECTED REGULARLY AND AFTER EACH STORM. THE SEDIMENT SHOULD BE REMOVED AND MAKE SURE EACH STAKE IS FIRMLY IN THE GROUND.

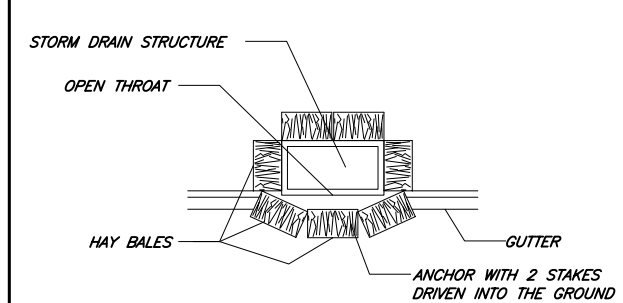

PLAN SHOWING HAY BALES

N.T.S.

NOT APPROVED FOR CONSTRUCTION

DAMMON ENGINEERING, INC.
EMMETT DAMMON
ARCHITECT ROBERT WILTSE
1095 FLORIDA AVENUE
SLIDELL, LA. 70458
985-649-5832
WEBSITE: WWW.DAMMONENGINEERING.COM
EMAIL: DAMMONENG@BELLSOUTH.NET
ARCHITECTURE
ENGINEERING
STUDIES
PLANNING
INVESTIGATION
EXPERT WITNESS

NEW OFFICE/ WAREHOUSE

O'BRIEN/NORTH SHORE FLOORING DISTRIBUTORS
J.F. SMITH AVE.
SLIDELL, LA

SILT FENCING DETAILS

REV:

SCALE: AS NOTED
JOB#: 1912
DATE: 1–4–08
SHEET
C-5
OF