LEGEND

SYMBOL	DESCRIPTION
Emergency light	EMERGENCY LIGHT FIXTURE(12W)
Exit light	EXIT LIGHT FIXTURE - WALL MOUNTED (10W)
Exterior light	LED EXTERIOR WALL MOUNTED LIGHT FIXTURE WITH 90 MIN. BACK-UP (75W)
2x4 fixture	2X4 SURFACE MOUNTED FLUORESCENT OR LED LIGHTING; 3 LAMPS PER FIXTURE, 2850 LUMENS PER LAMP
1x2 fixture	1X2 - SURFACE MOUNTED FLUORESCENT OR LED LIGHTING; 2 LAMPS PER FIXTURE; 1200 LUMENS PER LAMP (RESTROOMS)
LP	ELECTRIC PANEL BOARD
Arrow	CIRCUIT HOME RUN
$	LIGHT SWITCH 120V COMMERCIAL GRADE
$3	LIGHT SWITCH - 3-WAY 120V COMMERCIAL GRADE
Fan	EXHAUST FAN SEE MECH.
1x6 fixture	1X6 SURFACED MOUNTED FLUORESCENT OF LED LIGHTING; 3 LAMPS PER LAMP

LEGEND

SYMB	DESCRIPTION
Duplex	STANDARD 120V DUPLEX RECEPTACLE, NEMA 5-2 OR 18" AFF (UNLESS OTHERWISE NOTED)
GFCI	GFCI DUPLEX RECEPTACLE
WP	WEATHER-PROOF GFCI DUPLEX RECEPTACLE MOUNTED AT 30" AFF (UNLESS OTHERWISE NOTED)
Circle	JUNCTION BOX
Box	FUSED DISCONNECT

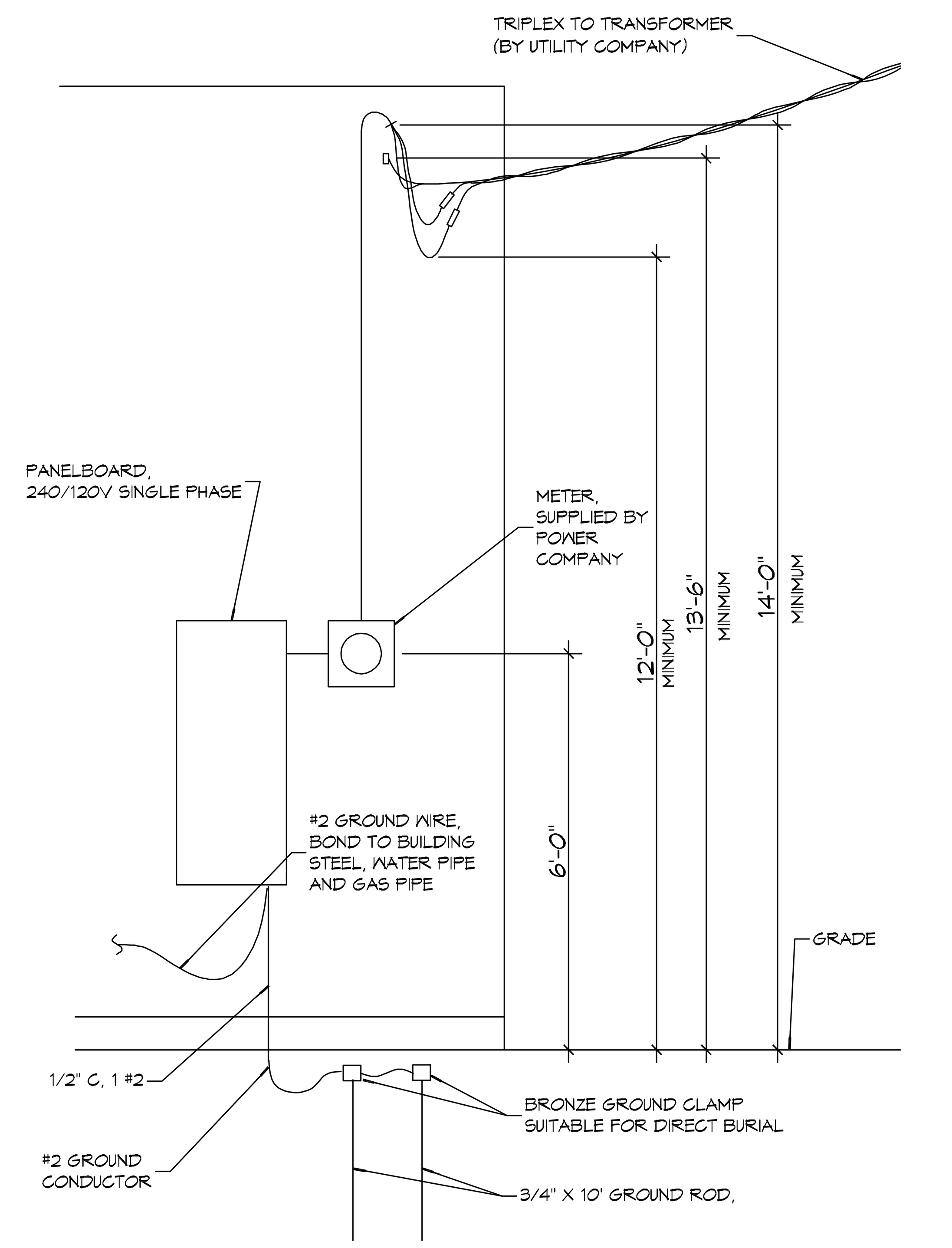

22 RISER DIAGRAM
SCALE: 1/8"=1'-0"

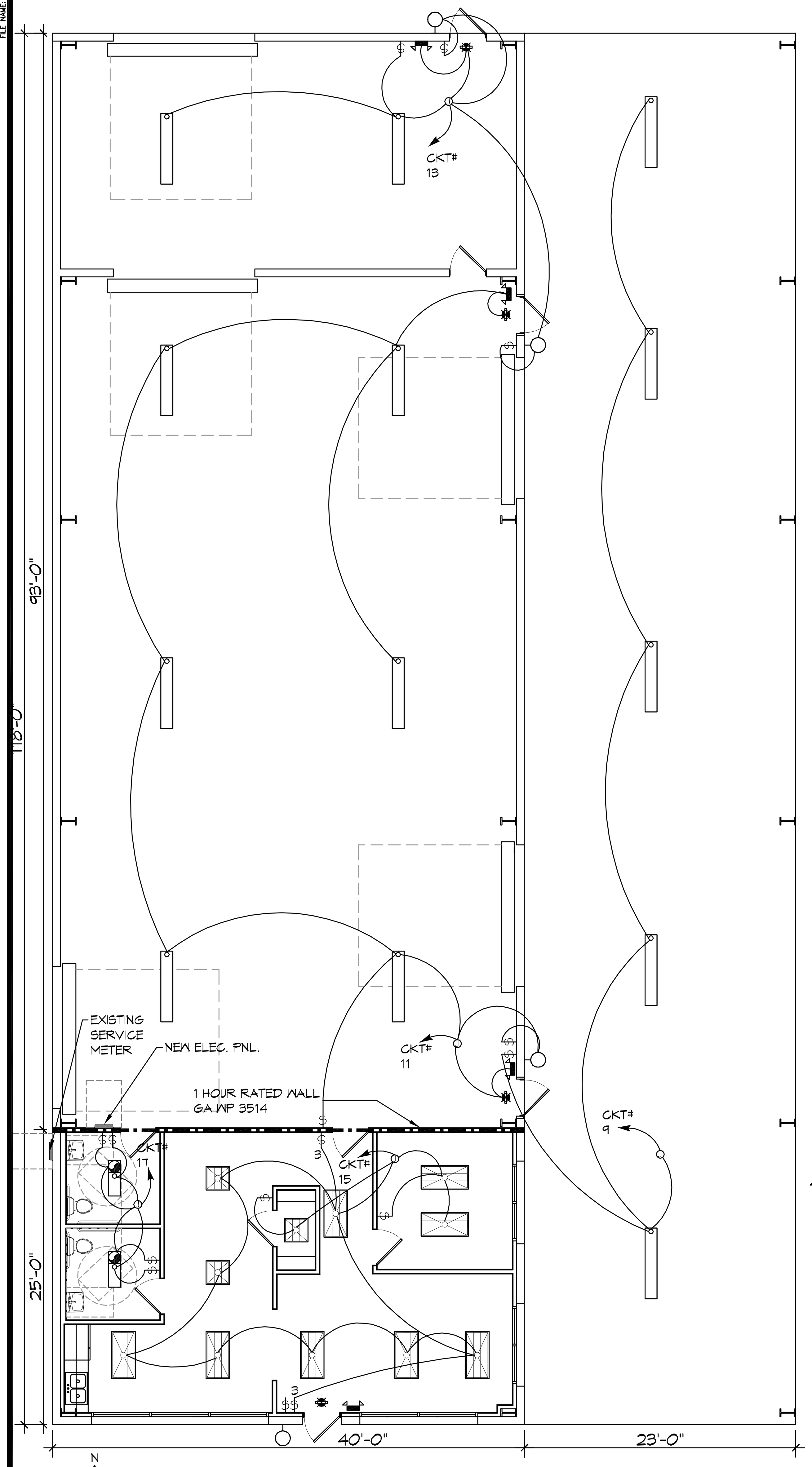

19 FLOOR PLAN-POWER
SCALE: 1/8"=1'-0"

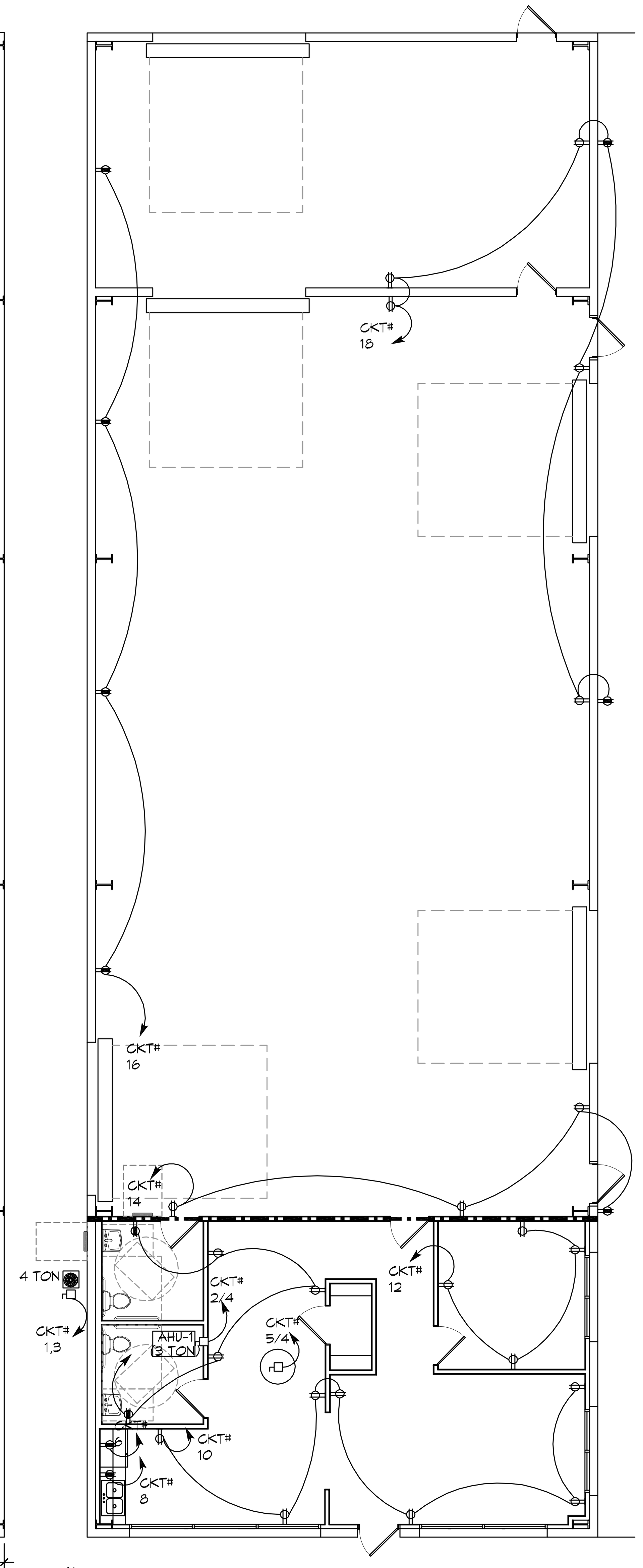

20 FLOOR PLAN-LIGHTING
SCALE: 1/8"=1'-0"

ELECTRICAL LOAD SUMMARY

C L E C O POWER COMPANY

PROJECT NAME: SURGI
PROJECT ADDRESS: X
CITY/TOWN: SLIDELL, LOUISIANA
INTENDED USER: X

REQ SERV: 240 V 1 PHASE 3 WIRES
SERV ENTR SIZE: 200 AMPS
HVAC TONNAGE: 3 TONS
LARGEST MOTOR: HP

(NOTE: MOTORS ABOVE 20HP MAY REQUIRE REDUCED VOLTAGE STARTING AND ARE NEVER RECOMMENDED FOR USE W/ 120/240V, 1Φ, 3W SERVICE)

TOTAL BUILDING SQ FT: 0 SF
INDIVIDUAL UNIT SQUARE FOOTAGE: SF (MULT OCCUPANCY)
INDIVUDUAL UNIT DESIGNATION: (MULT OCCUPANCY)

LOAD SOURCE	1Φ-KVA	3Φ-K VA	OR	1Φ-K W	3Φ-K W
BUILDING LIGHTING	3.8				
ELECTRIC WATER HEATING	10.0				
HEAT PUMPS	0				
SUPPLEMENTAL HEAT SYSTEMS	0				
AIR COND CONDENSING UNITS	2.2				
ELEC HEATING (PRIMARY) - AHU's	0				
COOKING	N/A				
REFRIGERATION	1.2				
RECEPTACLES (STANDARD)	7.0				
RECEPTACLES (COMPUTER)	0				
TOTAL MOTORS (EXCLUDE HVAC)	0				
EXTERIOR LIGHTING	0				
MISCELLANEOUS - CEILING FANS	0				
OTHER (POOL EQUIPMENT, TENNANT)	0				

PANEL SCHEDULE

PANEL: MDP
LOCATION: EXTERIOR WALL BY METER
FEEDER SOURCE: CLECO
VOLTAGE: 120/240V, 200A, 1Φ, 3W
ENCLOSURE: SURFACE MOUNTED, NEMA 3R PNLBD, 200A MB, W/EQUIP GND BAR, 22000 AIC

CKT NO	THHN WIRE SIZE	LOAD DESCRIPTION LOCATION	BREAKER AMP	BREAKER POLE	LOAD (kva) AΦ	LOAD (kva) BΦ	BREAKER POLE	BREAKER AMP	LOAD DESCRIPTION LOCATION	THHN WIRE SIZE	CKT NO
1	#12	CONDENSER UNIT, 3 TON	20	2	1100	440	2	20	AHU, 3 TON	#12	2
3					1100	440					4
5	#10	WATER HEATER	30	2	5000	1200	1	20	REFRIGERATOR RECEPTACLE	#12	6
7					5000	1200	1	20	KITCHEN COUNTER RECEPTACLE	#12	8
9	#12	LIGHTING, PORCH	20	1	750	1260	1	20	RECEPTACLES, OFFICE	#12	10
11	#12	LIGHTING, WAREHOUSE, CENTER	20	1	1000	720	1	20	RECEPTACLES, OFFICE	#12	12
13	#12	LIGHTING, WAREHOUSE, NORTH	20	1	300	720	1	20	RECEPTACLES, SOUTH END OF WAREHOUSE	#12	14
15	#12	LIGHTING, OFFICE	20	1	1100	720	1	20	RECEPTACLES, WEST END OF WAREHOUSE	#12	16
17	#12	LIGHTING, RESTROOMS	20	1	600	1260	1	20	RECEPTACLES, NORTH END OF WAREHOUSE	#12	18
19	-	SPARE	20	1	-	-	1	20	SPARE	-	20
21	-	SPARE	20	1	-	-	1	20	SPARE	-	22
23	-	SPARE	20	1	-	-	1	20	SPARE	-	24
25	-	SPARE	20	1	-	-	1	20	SPARE	-	26
27	-	SPARE	20	1	-	-	1	20	SPARE	-	28
29	-	SPARE	20	1	-	-	1	20	SPARE	-	30
31	-	SPARE	20	1	-	-	1	20	SPARE	-	32
33	-	SPARE	20	1	-	-	1	20	SPARE	-	34
35	-	SPARE	20	1	-	-	1	20	SPARE	-	36
37	-	SPARE	20	1	-	-	1	20	SPARE	-	38
39	-	SPARE	20	1	-	-	1	20	SPARE	-	40
41	-	SPARE	20	1	-	-	1	20	SPARE	-	42

SOLID NEUTRAL NEUTRAL WIRE (W)
TOTAL CONNECTED LOAD (VA) = 23,910
AΦ = 12,630 BΦ = 11,280
GROUND BUS GROUND WIRE (G)

21 PANEL
SCALE: 1/8"=1'-0"

GENERAL POWER NOTES

1. ALL WORK SHALL CONFORM TO THE LATEST EDITION OF THE NATIONAL ELECTRICAL CODE, THE GOVERNING ELECTRICAL CODE AND ALL OTHER INSPECTION DEPARTMENTS HAVING JURISDICTION. OBTAIN CERTIFICATES OR APPROVAL WHERE REQUIRED. ELECTRICAL CONTRACTOR SHALL VERIFY ALL WIRE AND CONDUIT SIZES FOR MECHANICAL EQUIPMENT TO BE INSTALLED.
2. ALL MATERIALS FURNISHED SHALL BE NEW AND SHALL BE U.L. LISTED.
3. THE DRAWINGS INDICATE SIZE AND GENERAL LOCATION OF WORK. SCALE DIMENSIONS SHALL NOT BE USED. THE EXACT LOCATION OF ALL LIGHTING FIXTURES, RECEPTACLES AND TELEPHONE OUTLETS, ETC. SHALL BE DETERMINED BY ACTUAL CONDITIONS IN THE FIELD.
4. PRIOR TO BIDDING, CONTRACTOR SHALL VISIT THE JOB SITE AND FAMILIARIZE THEMSELVES WITH THE EXISTING CONDITIONS.
5. ELECTRICAL CONTRACTOR SHALL COORDINATE HIS WORK WITH OTHER TRADES AND WITH OTHER CONTRACTORS WHOSE WORK MAY AFFECT THIS INSTALLATION.
6. ELECTRICAL CONTRACTOR SHALL COORDINATE INCOMING ELECTRICAL SERVICE WITH UTILITY COMPANY AND INCLUDE IN HIS BID ALL CHARGES AND FEES INCURRED IN MODIFICATIONS.
7. ELECTRICAL CONTRACTOR SHALL COORDINATE THE TELEPHONE INSTALLATION WITH THE TELEPHONE COMPANY AND THE GENERAL CONTRACTOR.
8. ELECTRICAL CONTRACTOR, BEFORE INSTALLING ANY OF THE WORK, SHALL SEE THAT IT DOES NOT INTERFERE WITH CLEARANCES REQUIRED FOR FINISHED COLUMNS, HUNG CEILINGS, PLASTER, PARTITIONS, WALLS, ETC. AS SHOWN IN THE ARCHITECTURAL DRAWINGS AND DETAILS. IF ANY WORK IS INSTALLED AND IT LATER DEVELOPS THAT SUCH DETAILS OR DESIGN CANNOT BE FOLLOWED, THE CONTRACTOR, AT HIS OWN EXPENSE, SHALL MAKE SUCH CHANGES IN THE WORK AS DIRECTED BY THE ARCHITECT, AS WELL AS TO PERMIT THE INSTALLATION OF THE ARCHITECTURAL WORK AS SHOWN ON THE PLANS AND DETAILS.
9. PERFORM TEST REQUIRED BY THE OWNER OR THE ENGINEER IN CONNECTION WITH THE OPERATION OF THE ELECTRICAL SYSTEM IN THE BUILDING. ALL TESTS SHALL BE MADE IN ACCORDANCE WITH THE LATEST STANDARD OF THE IEEE AND THE NATIONAL ELECTRICAL CODE.
10. MINIMUM CONDUCTOR SIZE SHALL BE #12, 600V INSULATION. MINIMUM SIZE CONDUIT SHALL BE ¾" ELECTRICAL METALLIC TUBING (EMT) FOR INTERIOR USE, ¾" RIGID ALUMINUM FOR EXTERIOR USE ABOVE GRADE AND 1" SCHEDULE 40 PVC, BURIED A MINIMUM OF 18" FOR NON-VEHICLUAR TRAFFIC AREAS, FOR CONDUITS BELOW GRADE . EMT SHALL BE USED WITH METAL STUD CONSTRUCTION AND ALL ASSEMBLY OCCUPANCIES. 6 FT LENGTH MC CABLE IS ALLOWED ABOVE DROPPED CEILING. INTERIOR FITTINGS SHALL BE CAST WHERE EXPOSED ON WALLS, AND EXTERIOR FITTINGS SHALL BE CAST BOXES WITH NEMA 3R COVER(S).
11. CONTRACTOR SHALL INSTALL WIRING AND OTHER CIRCUIT COMPONENTS TO MATCH EQUIPMENT ACTUALLY INSTALLED.
12. ALL 120V RUNS LONGER THAN 60 FEET SHALL BE #10 AWG AND 277V RUNS LONGER THAN 150 FEET SHALL BE #10 AWG UNLESS NOTED OTHERWISE.
13. INSTALL GROUND FAULT RECEPTACLES AT RECEPTACLE LOCATIONS WITHIN 5' OF SINKS OR LAVATORIES, AND AT EXTERIOR LOCATIONS. EXTERIOR RECEPTACLES SHALL ALSO BE WATERPROOF. ALL RECEPTACLES IN A KITCHEN AREA SHALL HAVE GROUND FAULT PROTECTION.
14. BONDING AND GROUNDING SHALL BE IN ACCORDANCE WITH NFPA 70:230-63, NFPR 250-23, 250-71 & 250-72.
15. GROUND NEUTRAL IN ACCORDANCE WITH NFPA 70:250-23b.
16. FUSES SHALL BE ITT CLASS K5, 250 VOLT, 200,000 AMP INTERRUPTING CAP.
17. PROVIDE SERVICES OF A FIRE/SMOKE DETECTION AND ALARM COMPANY TO DESIGN AND INSTALL ALARM SYSTEM TO MEET REQUIREMENTS OF THE STATE FIRE MARSHALL AND THE FIRE DISTRICT.
18. EXTERIOR LIGHTING SHALL BE SHADED OR INWARDLY DIRECTED IN SUCH A MANNER SO THAT NO DIRECT LIGHTING OR GLARE IS CAST BEYOND THE PROPERTY LINE. THE INTENSITY OF SUCH LIGHTING SHALL NOT EXCEED ONE FOOT CANDLE AS MEASURED AT THE ABUTTING PROPERTY LINE.
19. ALL ELECTRICAL, MECHANICAL AND PLUMBING PENETRATING FIRE PARTITIONS SHALL BE FIRE CAULKED. (PENETRATIONS THROUGH RATED CONSTRUCTION SHALL BE SEALED WITH A MATERIAL CAPABLE OF PREVENTING THE PASSAGE OF FLAMES AND HOT GASES WHEN TESTED IN ACCORDANCE WITH ASTM-E814.)
20. VERIFY ELECTRICAL CONNECTIONS PER MANUFACTURER'S RECOMMENDATIONS.

GENERAL LIGHTING NOTES

1. ALL WORK SHALL COMPLY WITH APPLICABLE NATIONAL, STATE, AND LOCAL CODES, RULES, REGULATIONS, AND REQUIREMENTS OF THE SERVICE UTILITY COMPANY.
2. GENERAL CONTRACTOR SHALL NOTIFY THE ARCHITECT IMMEDIATELY IF ANY CONFLICTS OCCUR BETWEEN LIGHTING AND ANY OTHER TRADE. DO NOT PROCEED WITH INSTALLATION IN THAT AREA UNTIL CONFLICT HAS BEEN RESOLVED TO THE SATISFACTION OF THE ARCHITECT AND ENGINEER.
3. REFER TO ARCHITECTURAL DRAWINGS FOR EXACT LOCATION AND MOUNTING INSTRUCTIONS FOR ALL LIGHT FIXTURES. NOTIFY THE ARCHITECT AND ENGINEER OF ANY DISCREPANCIES BETWEEN THESE PLANS AND THE ARCHITECTURAL PLANS RELATING TO QUANTITY, TYPE AND LOCATION OF DEVICES AND/OR FIXTURES.
4. WHEN SPECIFIC LIGHT FIXTURE HAS BEEN SPECIFIED IN THE FIXTURE SCHEDULE, ELECTRICAL CONTRACTOR SHALL PROVIDE COMPLETE ASSEMBLY INCLUSIVE ALL PARTS AND HARDWARE TO INSURE PROPER FUNCTIONING FIXTURE.
5. ALL CONDUCTORS SHALL BE A MINIMUM OF #12 AWG UNLESS NOTED OTHERWISE.
6. ALL 120V RUNS LONGER THAN 60 FEET SHALL BE #10 AWG AND 277V RUNS LONGER THAN 150 FEET SHALL BE #10 AWG UNLESS NOTED OTHERWISE.
7. ALL CONDUCTORS SHALL BE COPPER.
8. WHERE CONDUCTOR SIZES ARE NOTED ON DRAWINGS, THAT WIRE SIZE SHALL BE THROUGH THE ENTIRE RUN UNLESS OTHERWISE NOTED.
9. MOUNTED LIGHT SWITCHES 48" AFF UNLESS NOTED OTHERWISE ON ARCHITECTURAL DRAWINGS.
8. WHERE MORE THAN ONE SWITCH OCCURS IN THE SAME LOCATION, THEY SHALL BE INSTALLED IN A GANG TYPE BOX UNDER ONE COVER PLATE. ALL GANGED SWITCHES SHALL HAVE A COMMON SEAMLESS FACEPLATE. EACH MULTI-GANGED BOX SHALL BE NO MORE THAN SIX (6) SWITCHES WIDE. WHERE MORE THAN SIX (6) SWITCHES ARE SHOWN AT ONE (1) LOCATION, ADDITIONAL MULTI-GANGED BOXES SHALL BE STACKED VERTICALLY AND THE WIDTH OF THE MULTI-GANGS SHALL BE AS EVEN AS POSSIBLE.
9. EACH DIMMER SWITCH SHALL HAVE A WATTAGE RATING 25% HIGHER THAN THE TOTAL WATTAGE OF AL LIGHTS TO BE CONTROLLED BY THE DIMMER. DIMMER SIZES 600, 1000, 1500, AND 2000 WATTS, LUTRON NOVA T-STAR. WHERE SWITCHES ARE GANGED WITH DIMMERS, THE SWITCHES SHALL ALSO BE LUTRON NOVA T-STAR. FLUORESCENT AND LOW VOLTAGE DIMMERS SHALL BE LUTRON NOVA T-STAR.
10. WHERE FLUORESCENT FIXTURES ARE SHOWN TO BE DIMMED, THE FIXTURES SHALL HAVE DIMMING TYPE BALLASTS WHICH ARE COMPATIBLE WITH THE SPECIFIED DIMMERS.
11. WHERE LED FIXTURES/LAMPS ARE SHOWN TO BE DIMMED, THE DIMMER SHALL BE COMPATIBLE WITH THE FIXTURE/LAMP SPECIFIED OR PROVIDED.
12. ALL EMERGENCY EXIT LIGHT FIXTURES SHALL HAVE 90 MINUTE BATTERY BACKUP WITH INTEGRAL TEST BUTTON AND SHALL BURN CONTINUOUSLY.
13. ALL FLUORESCENT FIXTURES THAT UTILIZE DOUBLE-ENDED LAMPS AND CONTAIN BALLASTS SHALL BE PROVIDED WITH A DISCONNECTING MEANS IN ACCORDANCE WITH NEC 410.73G.

DAMMON ENGINEERING, INC.
LOUISIANA & MISSISSIPPI
Chief Engineer: Brian Mistich, PE
554 Old Spanish Trail
Slidell, LA 70458
www.dammonengineering.com
info@dammonengineering.com
PH: 985.649.5832

REVISIONS

#	DESCRIPTION	DATE

SEAL: STATE OF LOUISIANA — BRIAN A. MISTICH — License No. 30187 — PROFESSIONAL ENGINEER

OFFICE WAREHOUSE RENOVATION

SURGI INVESTMENTS

38255 COAST BLVD. SLIDELL, LA

JOB No:	2395	DATE:	08-14-2019
DRAWN BY:	CKD	CHECKED BY:	BAM

The above drawings and specifications, designs and arrangements represented thereby are and shall remain the property of Dammon Engineering, and no part thereof shall be copied, disclosed to others, or used in connection with any work or project other than the specific project for which the have been prepared and developed without written consent of Dammon Engineering. Visual contact with these drawings or specifications shall constitute conclusive evidence of acceptance of these restrictions.

SHEET TITLE: POWER AND LIGHTING PLAN

DRAWING NUMBER: E101