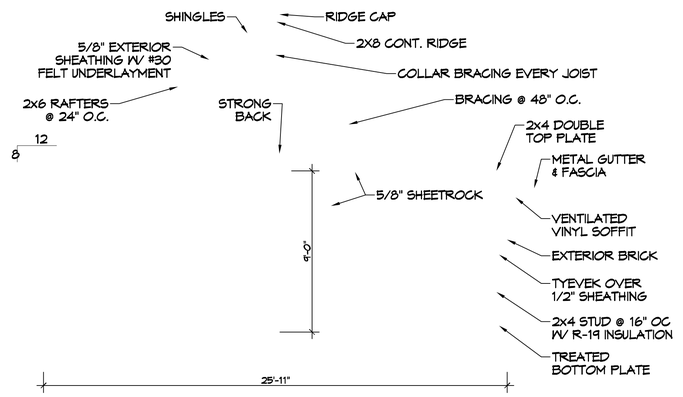

15 BUILDING SECTION
SCALE: 1/4"= 1'-0"

16 ROOF PLAN
SCALE: 1/4"= 1'-0"

DAMMON ENGINEERING, INC.
LOUISIANA & MISSISSIPPI
Chief Engineer: Brian Mistich, PE
5544 Crown Trail
Slidell, LA 70458
www.dammonengineering.com
info@dammonengineering.com
PH: 985.649.5832

REVISIONS

#	DESCRIPTION	DATE

SEAL:

NEW OFFICE BUILDING
ST. TAMMANY FEDERAL CREDIT UNION
21464 KOOP DRIVE
MANDEVILLE, LA.

JOB No: 2022 | DATE: 03-22-2022
DRAWN BY: CCD | CHECKED BY: JMS

THIS DOCUMENT IS THE PROPERTY OF DAMMON ENGINEERING, INC. AND MUST BE RETURNED UPON REQUEST. THE INFORMATION CONTAINED HEREIN IS TO BE USED ONLY FOR THE PROJECT FOR WHICH IT WAS PREPARED AND IS NOT TO BE USED FOR OTHER PURPOSES OR PROJECTS WITHOUT THE WRITTEN CONSENT OF DAMMON ENGINEERING, INC. THIS DOCUMENT IS ALSO THE PROPERTY OF OTHERS IN PART OR WHOLE AS INDICATED BY THEIR COPYRIGHTS OR PROPRIETARY LEGENDS.

SHEET TITLE:
SECTION
AND ROOF PLAN

DRAWING NUMBER:
A103

SHEET No: 9 of X

FILE NAME: J:\1- Offices\19 Tammany FCU Slidell Building Branch\Drawings\Current Drawings\A103 - Section and Roof Plan.dwg PLOT DATE & TIME: Monday, April 4, 2022 8:48:53 AM