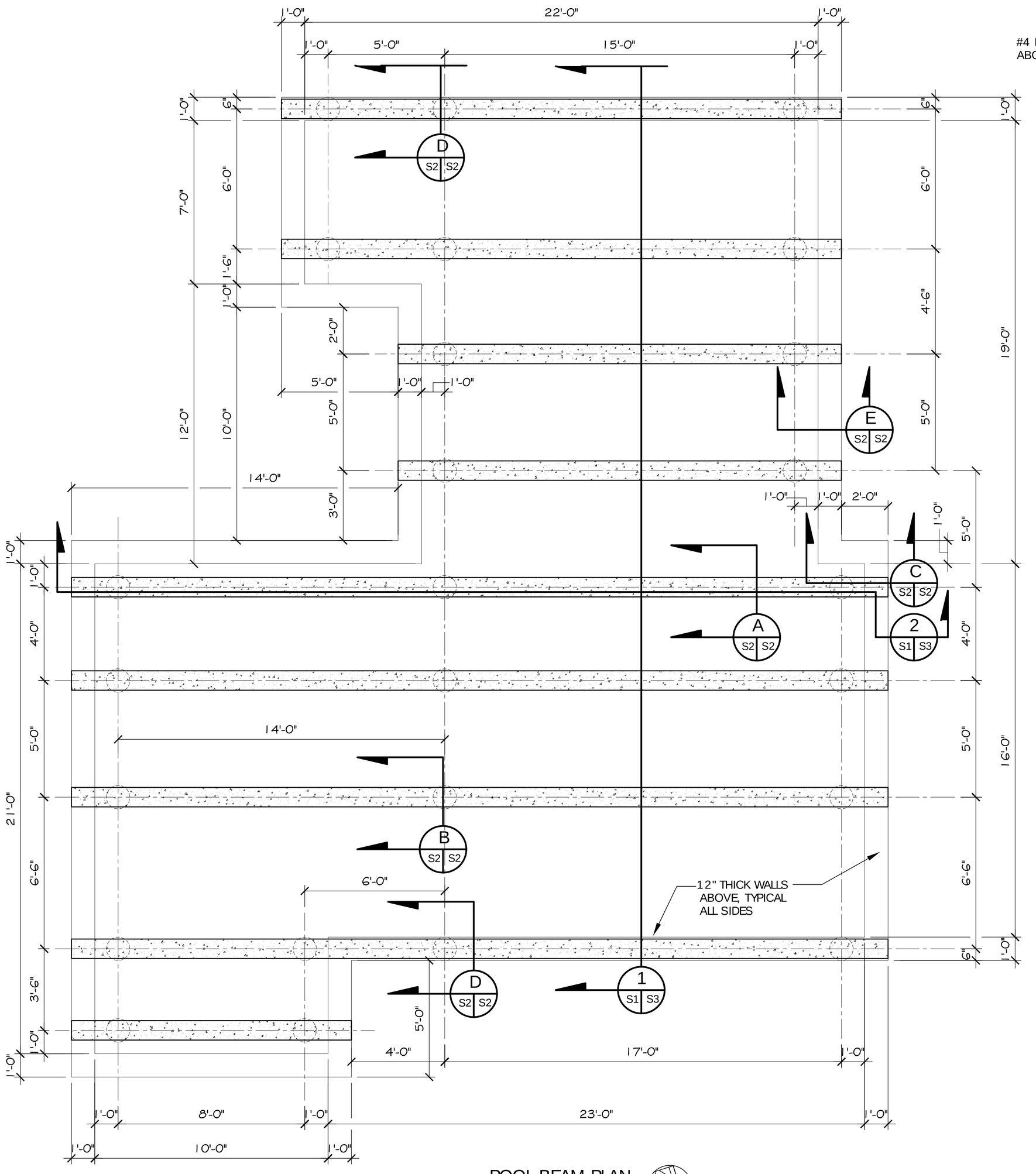

POOL BEAM PLAN

SCALE: 3/8"= 1'

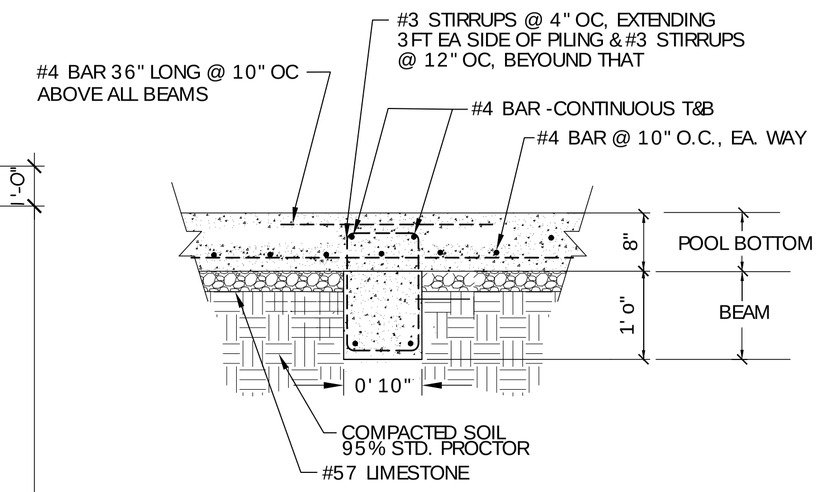

TYP. SECTION A

N.T.S.

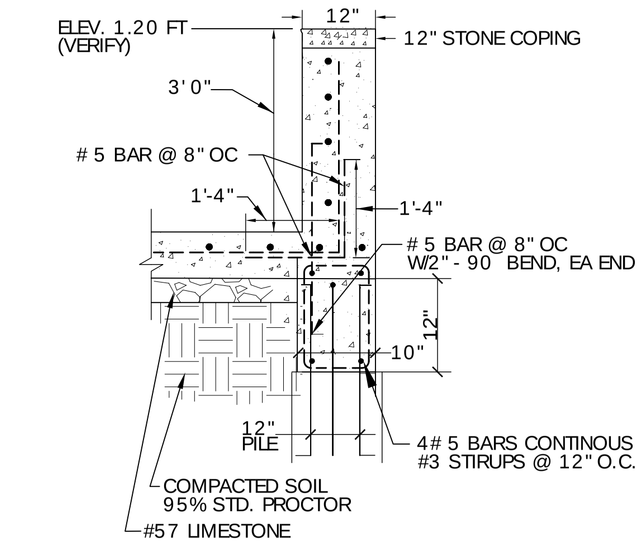

TYP. SECTION D

N.T.S.

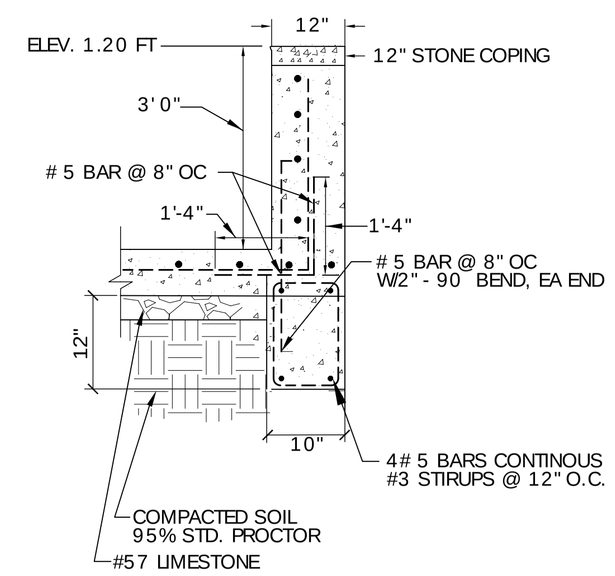

TYP. SECTION E

N.T.S.

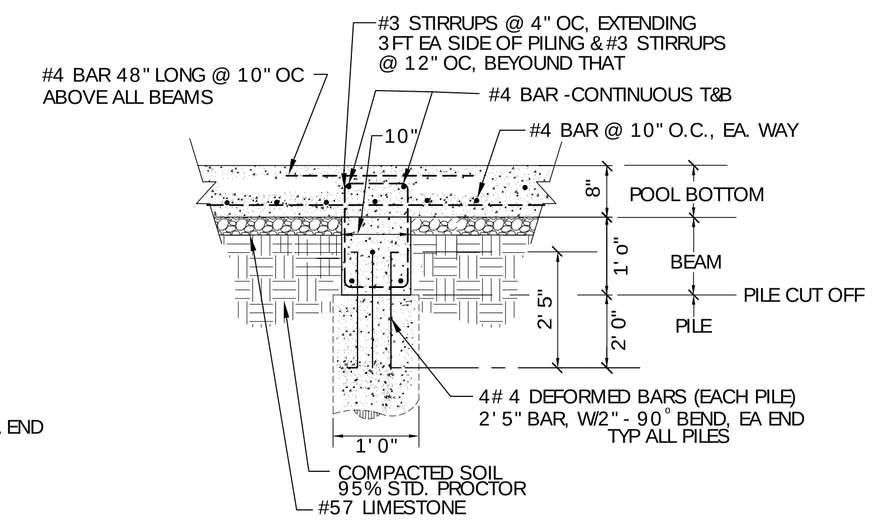

TYP. SECTION B

N.T.S.

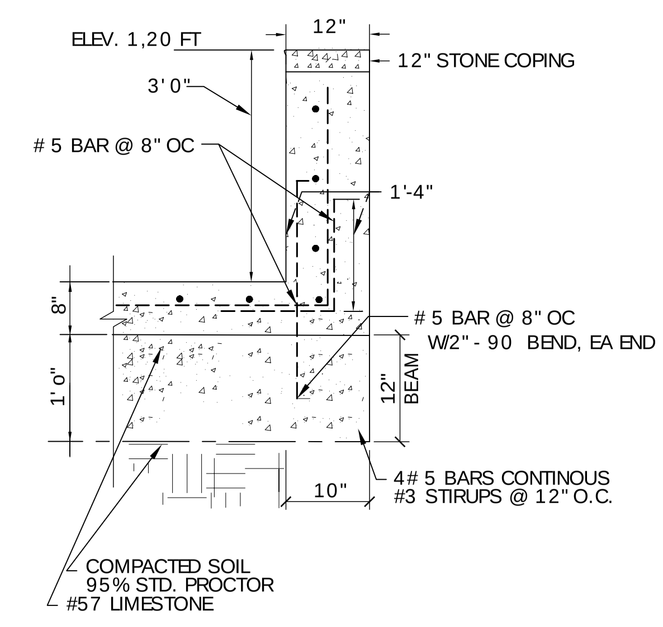

TYP. SECTION C

N.T.S.

ELEVATIONS			
DEPTHS FROM TOP OF POOL COPING			
PILE No	PILE CUT OFF	TO TOP OF POOL SLAB*	TO TOP OF BEAM *
1	4 FT 8 IN	STEPS	3 FT 8 IN
2	4 FT 8 IN	3 FT 0 IN	3 FT 8 IN
3	4 FT 8 IN	3 FT 0 IN	3 FT 8 IN
4	4 FT 8 IN	STEPS	3 FT 8 IN
5	4 FT 8 IN	3 FT 0 IN	3 FT 8 IN
6	4 FT 8 IN	3 FT 0 IN	3 FT 8 IN
7	4 FT 11 IN	3 FT 3 IN	3 FT 11 IN
8	4 FT 11 IN	3 FT 3 IN	3 FT 11 IN
9	5 FT 2 IN	3 FT 6 IN	4 FT 2 IN
10	4 FT 11 IN	3 FT 6 IN	3 FT 11 IN
11	5 FT 2 IN	3 FT 6 IN	4 FT 2 IN
12	5 FT 5 IN	3 FT 9 IN	4 FT 5 IN
13	5 FT 5 IN	3 FT 9 IN	4 FT 5 IN
14	5 FT 0 IN	3 FT 4 IN	4 FT 0 IN
15	5 FT 2 IN	3 FT 6 IN	4 FT 2 IN
16	5 FT 4 IN	3 FT 8 IN	4 FT 4 IN
17	4 FT 1 IN	3 FT 3 IN	3 FT 11 IN
18	4 FT 11 IN	3 FT 3 IN	3 FT 11 IN
19	5 FT 3 IN	3 FT 7 IN	4 FT 3 IN
20	4 FT 8 IN	3 FT 0 IN	3 FT 8 IN
21	4 FT 8 IN	3 FT 0 IN	3 FT 8 IN
22	4 FT 11 IN	3 FT 3 IN	3 FT 11 IN
23	5 FT 2 IN	3 FT 6 IN	4 FT 2 IN
24	5 FT 3 IN	STEPS	4 FT 3 IN
25	5 FT 3 IN	STEPS	4 FT 3 IN

* NOTE THAT POOL SLAB SITS ON BEAM.
DESIGN OF PILES IS BY OTHERS.
SEE LATEST CIVIL DRAWING FOR ELEV. OF TOP OF COPING.
TOP OF PILE CUT OFF ELEV. ARE GIVEN AS FT. & IN. , BELOW POOL COPING

NOTES:

1. TOP OF POOL COPING ELEVATION = 1.20'. COORDINATE ELEVATIONS WITH CIVIL DRAWINGS. DEPTHS SHOWN ARE FROM TOP OF COPING. DEPTH OF TOP OF BEAM AT WALLS = -3'-8". DEPTH TO TOP OF POOL FLOOR FROM COPING = -3'-0".
2. CONCRETE SHALL BE RATED 4000 PSI, 28 DAYS.

DAMMON ENGINEERING, INC.

CHIEF ENGINEER
EMMETT DAMMON, P.E.

CHIEF ARCHITECT
ROBERT WILTSE

554 OLD SPANISH TRAIL
SLIDELL, LA. 70458
OFFICE: 985-649-5832
FAX: 985-641-5950

WEBSITE:
WWW.DAMMONENGINEERING.COM

EMAIL:
DAMMONENG@BELLSOUTH.NET

ARCHITECTURE
ENGINEERING
STUDIES
PLANNING
INVESTIGATION
EXPERT WITNESS

PARC PLACE APARTMENTS
CHALMETTE, LA

ROTOLO CONSULTANTS, INCORPORATED
894 ROBERT BLVD.
SLIDELL, LA

POOL FOUNDATION GRADE BEAM PLAN

REV:

SCALE: AS NOTED

JOB#: 2103B

DATE: 04-15-11

SHEET

S-2

OF