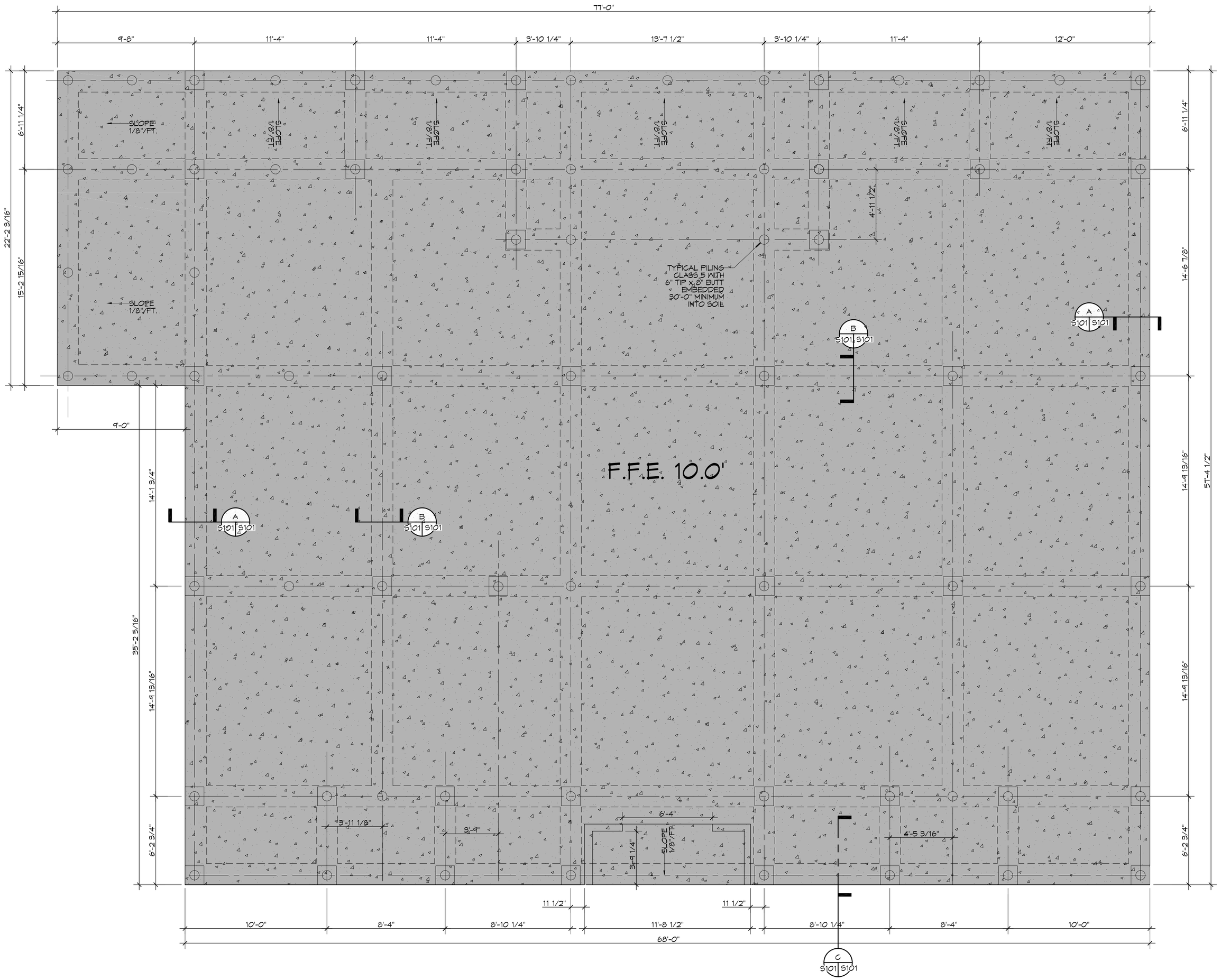

1 S101|S101 FOUNDATION PLAN
SCALE: 1/4" = 1'-0"

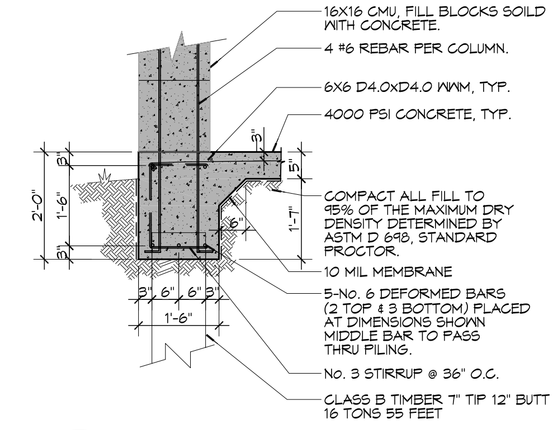

A S102|S101 SECTION
SCALE: 1/2" = 1'-0"

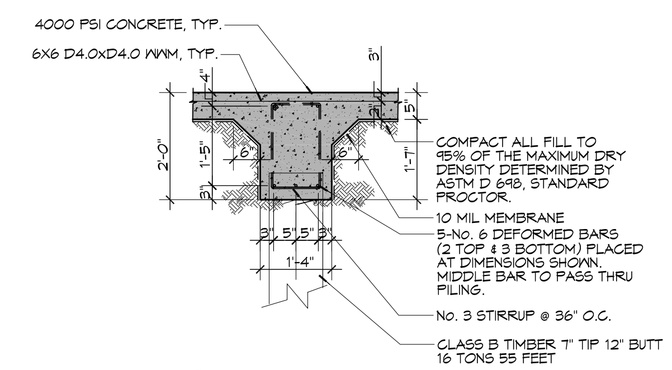

B S102|S101 SECTION
SCALE: 1/2" = 1'-0"

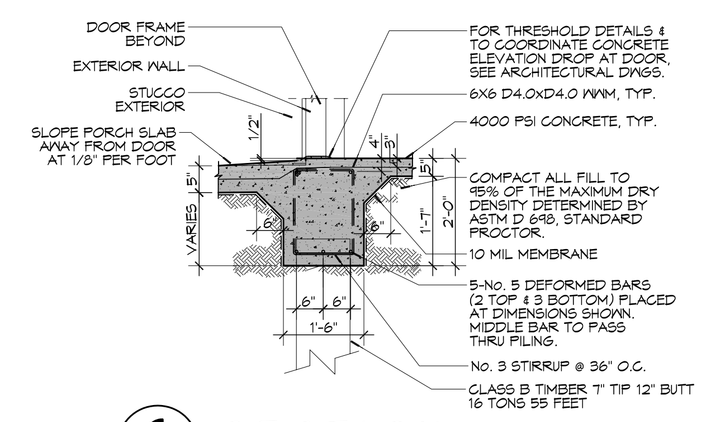

C S102|S101 SECTION
SCALE: 1/2" = 1'-0"

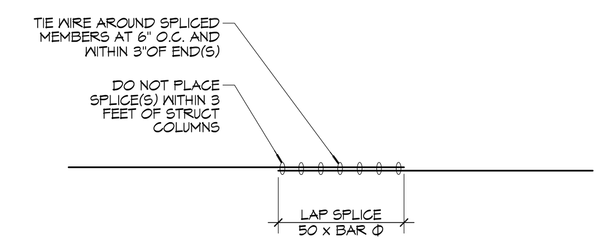

2 S102|S101 DETAIL
SCALE: 1/2" = 1'-0"

DAMMON ENGINEERING, INC.
www.dammonengineering.com
info@dammonengineering.com
Fax: 985.641.5950
554 Old Spanish Trail
Slidell, LA 70458
PH: 985.649.3832

#	DESCRIPTION	DATE
	REVISIONS	

SEAL:

NEW ESTATE FOR:
LISA & BRUCE CLEMENT
THREE JENNIFER LANE
SLIDELL, LOUISIANA 70458

JOB No:	2251	DATE:	09-03-15
DRAWN BY:	CKD	CHECKED BY:	BAM

This drawing and specification, design and arrangement represented thereby are the property of Dammon Engineering, Inc. and shall not be loaned, copied or used in any manner or for any purpose other than specifically provided in writing by Dammon Engineering, Inc. Any violation of this provision shall be deemed a violation of the rights of Dammon Engineering, Inc. and shall entitle Dammon Engineering, Inc. to immediate and permanent injunctive relief and damages. Please contact with questions or clarifications and conceptual discussions prior to bidding or construction.

SHEET TITLE:
FOUNDATION PLAN

DRAWING NUMBER:
S101

SHEET No: 3 of # 10