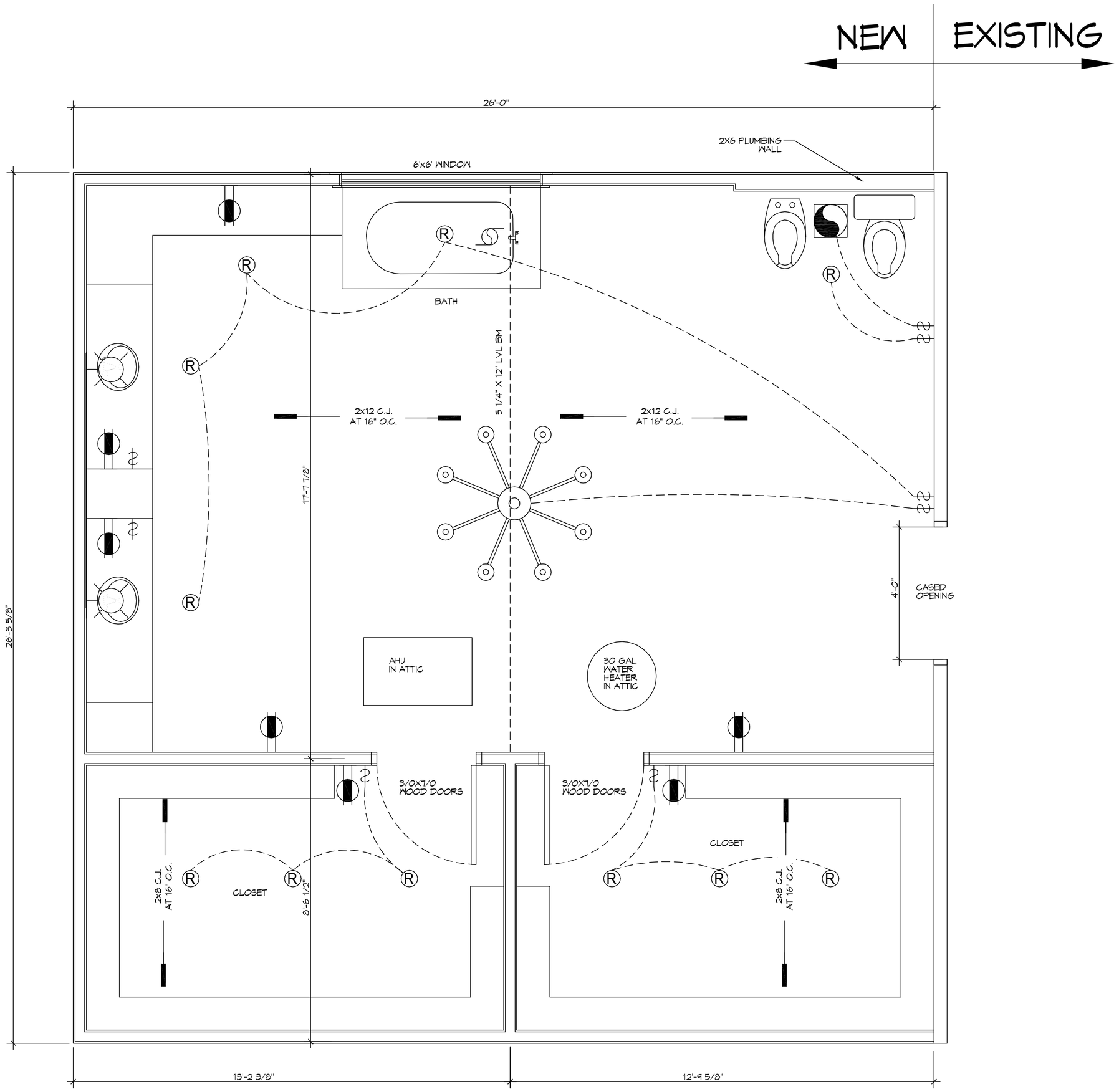

1 A101|A101 **BATHROOM LAYOUT**
SCALE: 1/2" = 1'-0"
ARCHITURAL

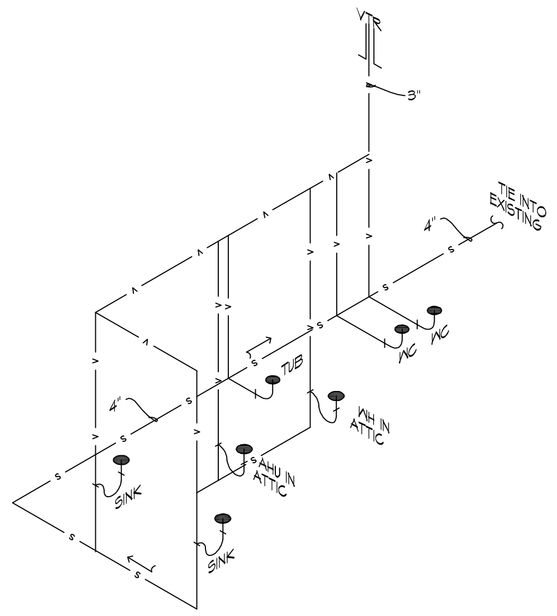

2 A101|A101 **PLUMBING LAYOUT**
SCALE: 1/4" = 1'-0"
PLUMBING

DAMMON ENGINEERING, INC.
LOUISIANA & MISSISSIPPI
www.dammonengineering.com
info@dammonengineering.com
PH: 985.649.5832
Chief Engineer: Brian Mistich, PE
4545 Dufrene Stadium Blvd
Slidell, LA 70458

#	DESCRIPTION	DATE

REVISIONS

SEAL:

BATHROOM ADDITION
THE CLEMENTS
138 CHAVALE DRIVE
SLIDELL LA. 70458

JOB No: 2018 DATE: 05-08-2018
DRAWN BY: CKD CHECKED BY: BAM

The data shown on any plans or sketches, regardless of form or purpose, is the property of Dammon Engineering, Inc. and is to be returned on demand. Any use or reproduction without written consent of Dammon Engineering, Inc. is prohibited. Data furnished to others for use on other projects or for others to bid have priority over conflicting or competing claims.

SHEET TITLE:
FLOOR PLAN

DRAWING NUMBER:
A101

SHEET No: 4 of # 5