CHEF MENTEUR PASS

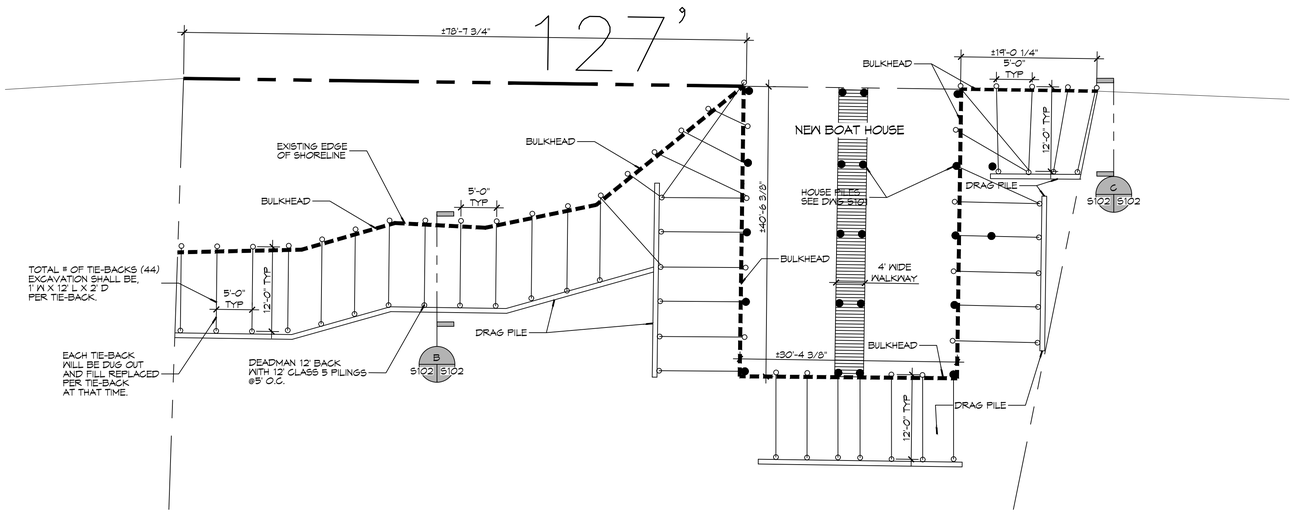

3 BULKHEAD PILING PLAN

SCALE: 1" = 10'

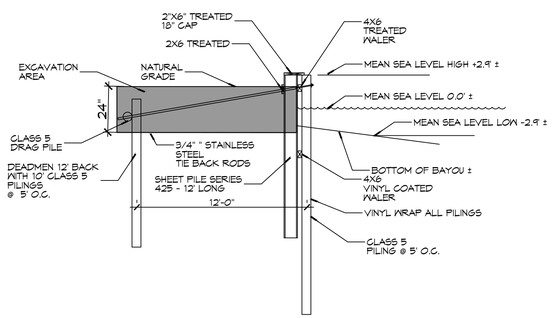

B TYPICAL BULKHEAD SECTION

S102 | S102

SCALE: 3/16" = 1'-0"

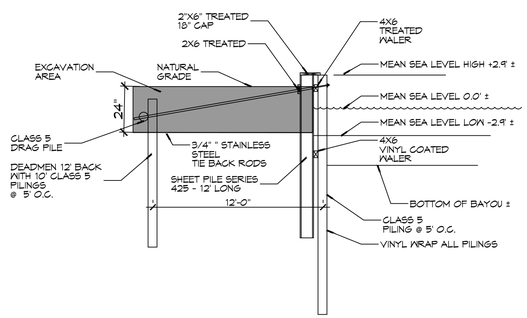

C TYPICAL BULKHEAD SECTION

S102 | S102

SCALE: 3/16" = 1'-0"

PILING NOTES

1. PILES ARE TO BE CLASS 5 PRESSURE TREATED WITH A 6 INCH TIP AND 8" BUTT.
2. ALL PILES SHALL BE DRIVEN TO REFUSAL.
3. CONTRACTOR SHALL DRIVE TEST PILE.
4. NO FIELD SUPERVISION OR INSPECTION PROVIDED UNDER THIS SEAL UNLESS OTHERWISE NOTED.
5. PILE LAYOUT MAY BE MODIFIED DUE TO ACTUAL DRIVING CONDITIONS. ENGINEER TO BE NOTIFIED ON ANY MODIFICATION.
7. A PILE BLOW COUNT LOG OF ALL PILES IS TO BE SUBMITTED TO THE ENGINEER OF RECORD. FAILURE TO SUBMIT SAID LOG WILL RELEASE THE ENGINEER OF ALL RESPONSIBILITY AFTER 5 DAYS OF INSTALLING.

GENERAL NOTES

1. ALL LUMBER SHALL BE PRESSURE TREATED WITH A RETENTION OF .4 PER C.F.
2. ALL FASTENERS SHALL BE HOT DIPPED GALVANIZED (HDG) PER ASTM A153.
3. ALL CONNECTORS SHALL BE HDG PER ASTM A653, CLASS G185 SHEET WITH 1.85 OZ/SF ZINC COATING.

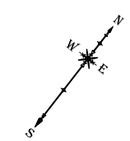

GRAPHIC SCALE

(IN FEET)
1 INCH = 1 FEET

DAMMON ENGINEERING, INC.
LOUISIANA & MISSISSIPPI
www.dammonengineering.com
info@dammonengineering.com
PH: 985.649.5333

Chief Engineer: Brian Mistich, PE
1550 Old Spanish Trail
Slidell, LA 70458

#	DESCRIPTION	DATE
	REVISIONS	

SEAL:

STATE OF LOUISIANA
BRIAN A. MISTICH
License No. 30187
PROFESSIONAL ENGINEER

BOAT HOUSE PLAN

ALBERT CUTITTO

LOT 16
2170 I CHEF MENTEUR HWY
NEW ORLEANS, LOUISIANA 70129

JOB No:	2024
DATE:	09-02-2024
DRAWN BY:	GKD
CHECKED BY:	BAM

THE CONTRACTOR IS RESPONSIBLE FOR VERIFYING ALL DIMENSIONS, ELEVATIONS, AND SITE CONDITIONS PRIOR TO THE START OF CONSTRUCTION. ANY ERRORS, OMISSIONS, OR DISCREPANCIES MUST BE REPORTED TO THE ENGINEER OF RECORD IMMEDIATELY. FAILURE TO DO SO WILL RELEASE THE ENGINEER OF RECORD FROM ANY RESPONSIBILITY FOR ERRORS OR OMISSIONS THAT MAY OCCUR. THE ENGINEER OF RECORD SHALL NOT BE RESPONSIBLE FOR ANY ADDITIONAL COSTS INCURRED BY THE CONTRACTOR DUE TO ERRORS, OMISSIONS, OR DISCREPANCIES IN THE DRAWINGS. THE ENGINEER OF RECORD SHALL NOT BE RESPONSIBLE FOR ANY CONSTRUCTION METHODS, TECHNIQUES, SEQUENCES, OR PROCEDURES. THE ENGINEER OF RECORD SHALL NOT BE RESPONSIBLE FOR THE SAFETY PRECAUTIONS AND PROGRAMS IN CONNECTION WITH THE WORK. THE ENGINEER OF RECORD SHALL NOT BE RESPONSIBLE FOR THE ACTS OR OMISSIONS OF THE CONTRACTOR, SUBCONTRACTORS, OR ANY OF THEIR AGENTS OR EMPLOYEES.

SHEET TITLE:
BULKHEAD PLAN

DRAWING NUMBER:

S102

SHEET No: 4 of 13