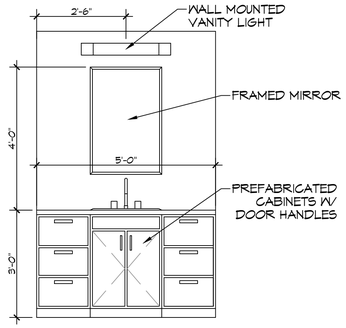

J A103 A103 SECOND FLOOR BATHROOM
SCALE: 1/2" = 1'-0"

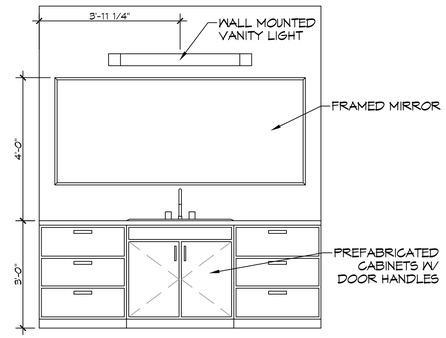

K A103 A103 MASTER BATHROOM
SCALE: 1/2" = 1'-0"

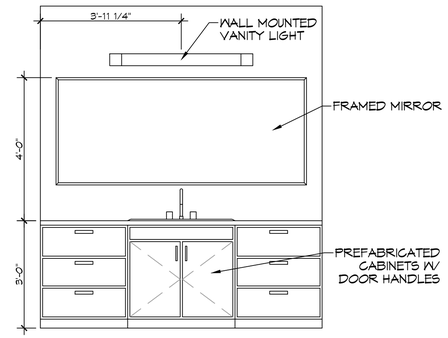

L A103 A103 MASTER BATHROOM
SCALE: 1/2" = 1'-0"

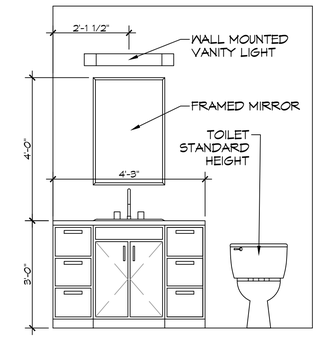

M A103 A103 POWDER ROOM
SCALE: 1/2" = 1'-0"

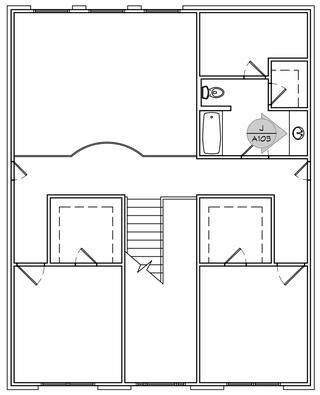

16 KEY PLAN
SCALE: 1/8"= 1'-0"

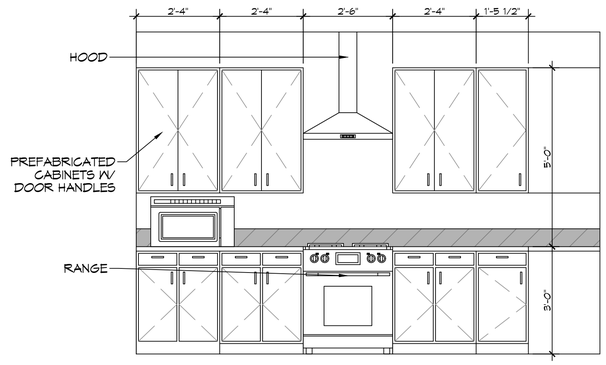

N A103 A103 KITCHEN
SCALE: 1/2" = 1'-0"

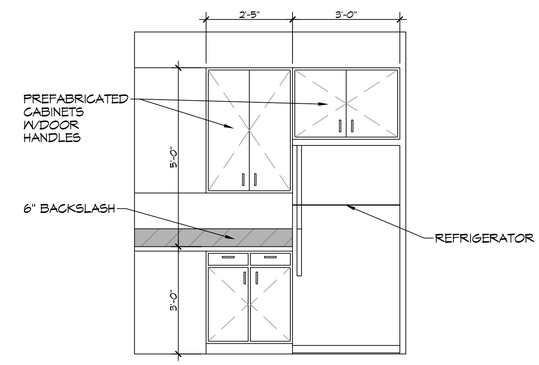

O A103 A103 KITCHEN
SCALE: 1/2" = 1'-0"

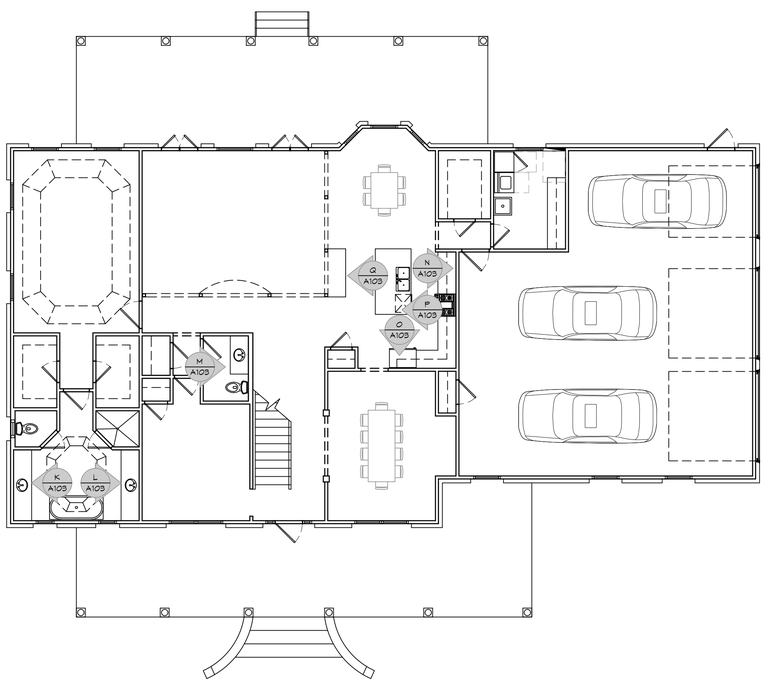

17 KEY PLAN
SCALE: 1/8"= 1'-0"

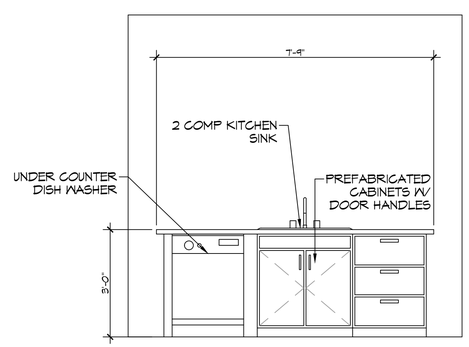

P A103 A103 KITCHEN ISLAND
SCALE: 1/2" = 1'-0"

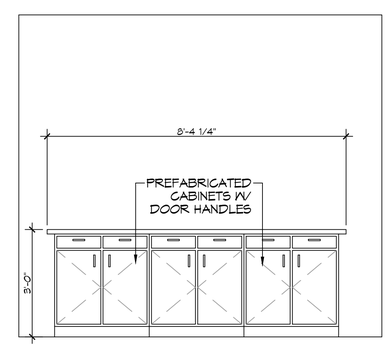

Q A103 A103 KITCHEN ISLAND
SCALE: 1/2" = 1'-0"

NOTE: FIELD VERIFY ALL DIMENSIONS, PAINT, FLOORING, LIGHTS, DOORS, ACCESSORIES, COLORS & STYLES WITH OWNER

DAMMON ENGINEERING, INC.
LOUISIANA & MISSISSIPPI
www.dammonengineering.com
info@dammonengineering.com
PH: 985.649.5832
Chief Engineer: Brian Mistich, PE
5544 Sharp Street
Slidell, LA 70458

#	DESCRIPTION	DATE

REVISIONS

SEAL:

HOUSE PLAN
DARRELL & CHARLETTE JOSEPH
LOT 31
CLABON DRIVE
SLIDELL, LA. 70460

JOB No:	SCK
DATE:	04-08-2024
DRAWN BY:	CHECKED BY: BAM

The drawings and specifications contained herein are the property of Dammon Engineering, Inc. and shall not be used for any other work except by written agreement with Dammon Engineering, Inc. They are not to be loaned, copied or disclosed to others, nor are they to be used on any other project for which this has been prepared and developed without written consent of Dammon Engineering, Inc. Dammon Engineering, Inc. assumes no responsibility for changes made to this design without its knowledge and consent.

SHEET TITLE:
INTERIOR ELEVATIONS PLAN

DRAWING NUMBER:
A103

SHEET No: 10 of 13

FILE NAME: J:_RESIDENTIAL\Darrell Joseph Clabon Drive Slidell\Current Drawings\A103 - Interior Elevations.dwg PLOT DATE & TIME: Monday, April 8, 2024 10:24:59 AM