File Name: J:_PROJECTS_2011\11-101 - Rick V. Betbeze\Drawings\S101 - Foundation Plan.dwg PLOT DATE & TIME: Friday, March 24, 2017 @ 4:14:18 PM

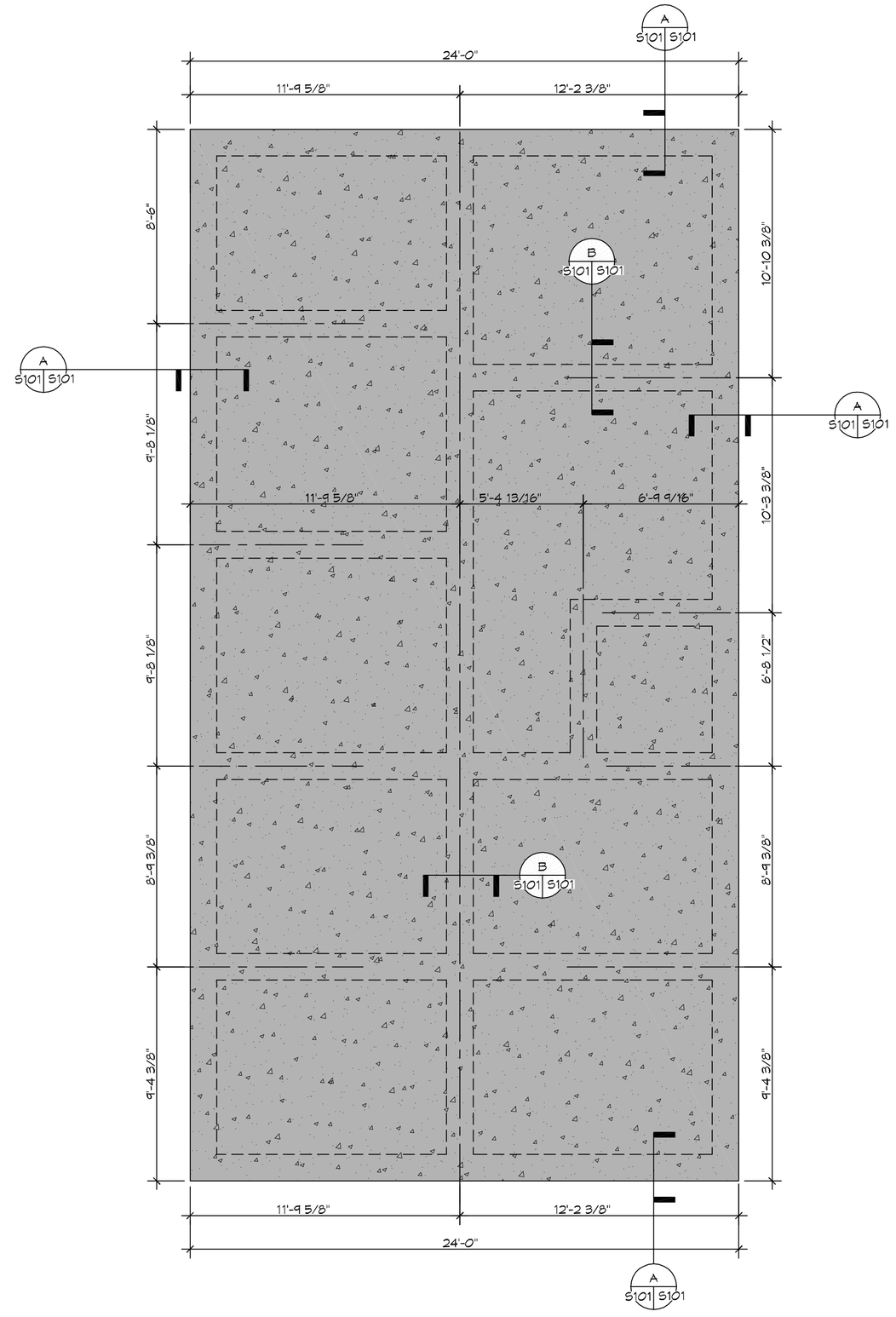

1 S101 S101 FOUNDATION PLAN
SCALE: 1/4" = 1'-0"
FOUNDATION

FOUNDATION NOTES

1. ALL DIMENSIONS ARE EDGE OF CONCRETE (EOC) TO EDGE OF CONCRETE (EOC) UNLESS NOTED OTHERWISE.
2. VERIFY ALL PLUMBING ROUGH-IN LOCATIONS ON ARCHITECTURAL DWGS.
3. CONCRETE MIX SHALL HAVE A MINIMUM COMPRESSIVE STRENGTH OF 3000 PSI AT 28 DAYS. CONCRETE MIX SHALL BE IN ACCORDANCE WITH ACI-318.
4. ALL CONVENTIONAL REINFORCING STEEL SHALL MEET ASTM-A615 (GRADE 60).
5. ONE LAYER OF POLYETHYLENE VAPOR BARRIER SHALL BE PLACED UNDER ALL CONCRETE. VAPOR RETARDER TO BE MINIMUM 10 MIL THICKNESS; ASTM E 1745 CLASS A, PERMEANCE LESS THAN 0.01 PERMS, EQUAL TO STEGO INDUSTRIES STEGO WRAP, ECOSHIELD-E 15 MIL BY EPRO, OR IRONBAR 15 BY FLATIRON FILMS. PROVIDE APPROPRIATE ACCESSORIES FOR A COMPLETE SYSTEM.
6. ALL REINFORCING STEEL AND MESH SHALL BE SECURELY SUPPORTED TO PREVENT BOTH VERTICAL AND HORIZONTAL MOVEMENT DURING CONCRETE PLACEMENT.
7. THE CONTRACTOR SHALL VERIFY ALL DROPS, OFFSETS, BRICK LEDGES, DIMENSIONS AND CONFIGURATIONS. CONTRACTOR MUST BE RESPONSIBLE FOR SAME.
8. GRADE BEAM DIMENSIONS MAY VARY BY -5%, +20%.
9. REMOVE ANY AND ALL BAD SOIL IN FOOT PRINT AND REPLACE WITH A4 SELECT.
10. ALL SOIL BELOW SLAB SHALL RECEIVE TERMITE TREATMENT.

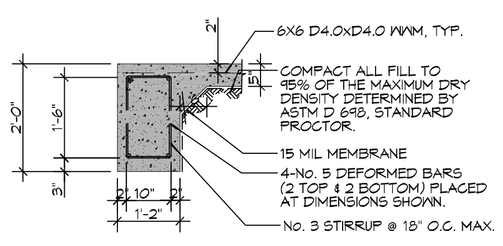

A S101 S101 SECTION
SCALE: 1/2" = 1'-0"

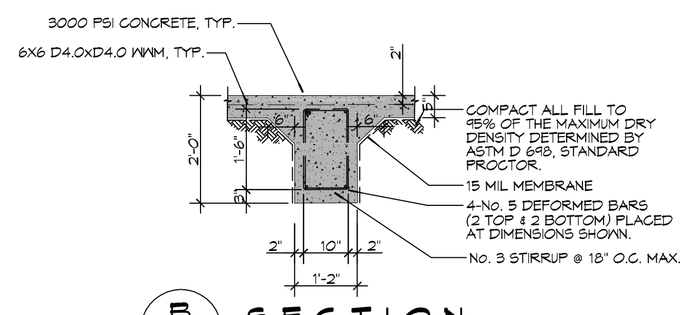

B S101 S101 SECTION
SCALE: 1/2" = 1'-0"

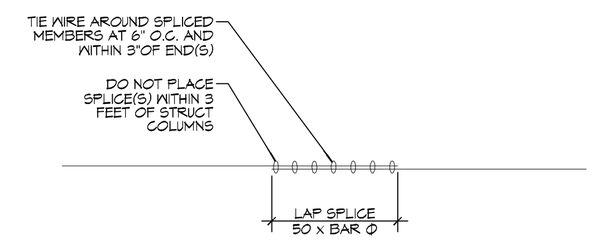

2 S101 S101 DETAIL
SCALE: 1/2" = 1'-0"

DAMMON ENGINEERING, INC.
www.dammonengineering.com
info@dammonengineering.com
Fax: 985.641.5950
554 Old Spanish Trail
Slidell, LA 70458
PH: 985.649.5822

#	DESCRIPTION	DATE

REVISIONS

SEAL:

NEW GARAGE FOR:
RICK V. BETBEZE
72169 INDIAN TRAIL
ABITA SPRINGS, LOUISIANA 70456

JOB No: 2017
DATE:
DRAWN BY: GKD
CHECKED BY: BAM

These plans and/or specifications, designs and all engineering reports, drawings and specifications are the property of Dammon Engineering, and are not to be used, reproduced or copied in whole or in part without written permission of Dammon Engineering. These plans and/or specifications and designs are to be returned upon request of Dammon Engineering.

SHEET TITLE:
FOUNDATION PLAN

DRAWING NUMBER:
S101

SHEET No: 3 of # 10