LIFE-SAFETY INFORMATION

APPLICABLE CODES

NFPA 101 LIFE-SAFETY CODE 2015

OCCUPANCY A-2, ASSEMBLY USES INTENDED FOR FOOD AND DRINK CONSUMPTION (RESTAURANTS) ; CONSTRUCTION TYPE V B

ASSEMBLY (CHAPTER 13)

MIXED OCCUPANCY — *(REFERENCE CHAPTER 6)*

OCCUPANT LOAD FACTOR — *(REFERENCE TABLE 7.3.1.2)*

DINING	449 S.F. NET	ASSEMBLY WITHOUT FIXED SEATS - UNCONCENTRATED (TABLES AND CHAIRS) - 15 NET PER OCCUPANT =	30 OCCUPANTS
KITCHEN	321 S.F. GROSS	100 S.F. / PERSON	4 OCCUPANTS
SERVING AREA	316 S.F.	100 S.F. / PERSON	4 OCCUPANTS

TOTAL OCCUPANTS = 38

CLASSIFICATION OF HAZARD OF CONTENTS

(REFERENCE: OCCUPANCY CHAPTER AND 6.2.2: SPECIFY LOW, ORDINARY, OR HIGH)

CONSTRUCTION TYPE(S) *(REFERENCE: CHAPTER8, TABLE A.8.2.1.2 AND COMMENTARY TABLE 8.1 IN HANDBOOK)*

CONST. TYPE= 5(000)

MINIMUM EXIT SEPARATION DISTANCE FOR REMOTELY LOCATED EXITS

(REFERENCE: SECTION 7.5; SPECIFY 1/2 OR 1/3 DIAGONAL DISTANCE OF AREA SERVED)

1/2 DIAGONAL DINING =	83.75 FT / 2 =	41.88 Ft
½ DIAGONAL KITCHEN =	65.5 FT / 2 =	32.75 FT

MAXIMUM DEAD-END CORRIDORS *(REFERENCE: OCCUPANCY CHAPTER AND TABLE A.7.6)*

MAXIMUM COMMON PATH OF TRAVEL DISTANCE *(REFERENCE: OCCUPANCY CHAPTER AND TABLE A.7.6)*

MAXIMUM TRAVEL DISTANCE TO EXITS *(REFERENCE: OCCUPANCY CHAPTER AND TABLE A.7.6)*

*MAIN ENTRANCE MUST BE SIGNED TO ACCOMODATE 1/2 OCCUPANT LOAD OF BUILDING

EXTINGUISHMENT REQUIREMENTS	SPRINKLER (NOT REQUIRED)
DETECTION, ALARM, AND COMMUNICATION SYSTEMS	NO
ALLOWABLE HEIGHT AND BUILDING AREA	PER IBC EQUIVALENT CONSTRUCTION TYPE

BUILDING CODE INFORMATION

APPLICABLE CODES

IBC 2015

OCCUPANCY A-2, ASSEMBLY USES INTENDED FOR FOOD AND DRINK CONSUMPTION (RESTAURANTS) — *(IBC 2015 CHAPTER 10)*

OCCUPANT LOAD CALCULATIONS — (TABLE 1004.1.2)

ASSEMBLY - UN-CONCENTRATED (TABLES AND CHAIRS)	449 S.F. NET	15 NET / OCCUPANT	30 OCCUPANTS
KITCHEN	321 S.F. GROSS	100 S.F. GROSS / OCCUPANT	4 OCCUPANTS
SERVING AREA	316 S.F. GROSS	100 S.F. GROSS / OCCUPANT	4 OCCUPANTS
TOTAL OCCUPANTS			38 OCCUPANTS

CONSTRUCTION TYPE(S) — *(TABLE 503)*

V B *(SECTION 503)*

ALOWABLE HEIGHT AND BUILDING AREA LIMITED BY TYPE OF CONSTRUCTION

MAXIMUM HEIGHT IN FEET *(SECTION 503 & 504, TABLE 503)*		40
MAXIMUM AREA IN SQUARE FEET *(SECTION 503, 506 & 507, TABLE 503)*	MULTI STORY NON-SPRINKLED	6,000 S.F.
ALLOWABLE BUILDING AREA WITH FRONTAGE INCREASE		8,160 S.F.

WIND SPEED DESIGN REQUIREMENTS

IMPROVEMENTS TO THIS BUILDING SHALL BE DESIGNED WITH IBC SEC 1609 AS A FULLY ENCLOSED BLDG USING THE FOLLOWING INFORMATION:

WIND DESIGN DATA:

DETERMINATION OF WIND LOADS SHALL BE IN ACCORDANCE WITH IBC SEC 1609.3 (A), (B), OR (C) DEPENDING ON THE RISK CATEGORY

ULTIMATE WIND SPEED =	142 MPH (IBC FIG 1609C)	NOMINAL WIND SPEED =	Vasd = 110 MPH
RISK FACTOR:	CATEGORY 2	SURFACE ROUGHNESS =	C
TOPOGRAPHIC FACTOR =	1	EXPOSURE =	C
INTERNAL PRESSURE COEFFICIENT (ASCE 7-10 TABLE 26.11-1):		± 0.18	
LIVE LOADS (IBC SEC 1607)			
DINING ROOMS AND RESTAURANTS (IBC TABLE 1607.1):		100 PSF	
ASSEMBLY PLATFORMS (IBC TABLE 1607.1):		100 PSF	
ROOF LIVE LOADS (IBC TABLE 1607.1):		20 PSF UNIFORM, 300 LB CONCENTRATED	
SNOW LOADS (IBC TABLE 1608):			
GROUND SNOW LOAD (IBC FIG 1608.2):		5 PSF	

FLOOD ZONE INFORMATION

BASED ON THE LSU AGRICULTURE FLOOD MAP THIS PROPERTY IS IN A FLOOD ZONE

FIRM, COMMUNITY NO. 22103C0515F DATE: 04/30/2008

FLOOD ZONE:	AE	BASE FLOOD ELEVATION	NGVD 13

ELEVATIONS REFER TO NGVD 1929 DATUM

LIFE-SAFETY LEGEND

SYMBOL	DESCRIPTION
〉	EXITS
(45)	DOOR FIRE RATING (MINUTES)
36/170	DOOR WIDTH/EGRESS CAPACITY
	EXIT LIGHT
FE	FIRE EXTINGUISHER W/ WALL MTD BRACKET
	COMMON PATH OF TRAVEL
○○○○○○○○○○	TRAVEL DISTANCE
●	DECISION POINT

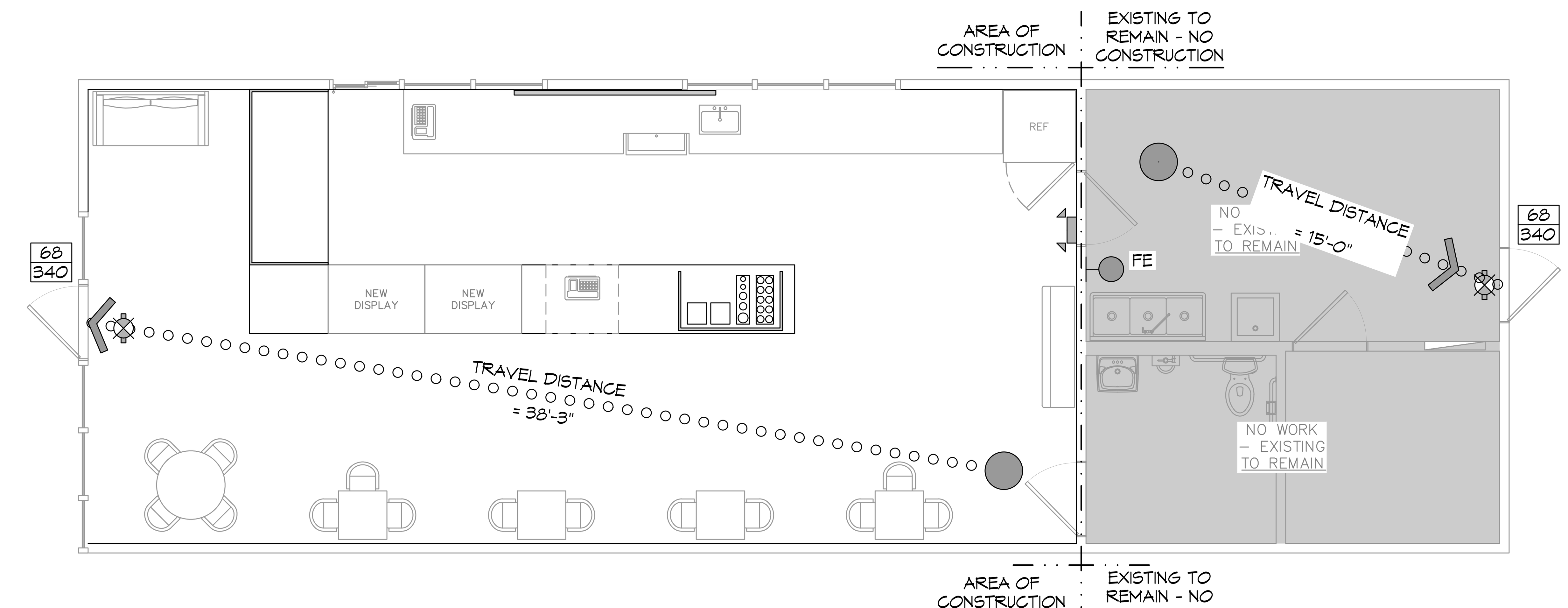

LIFE-SAFETY PLAN

SCALE: 1/4" = 1'-0"

VICINITY MAP

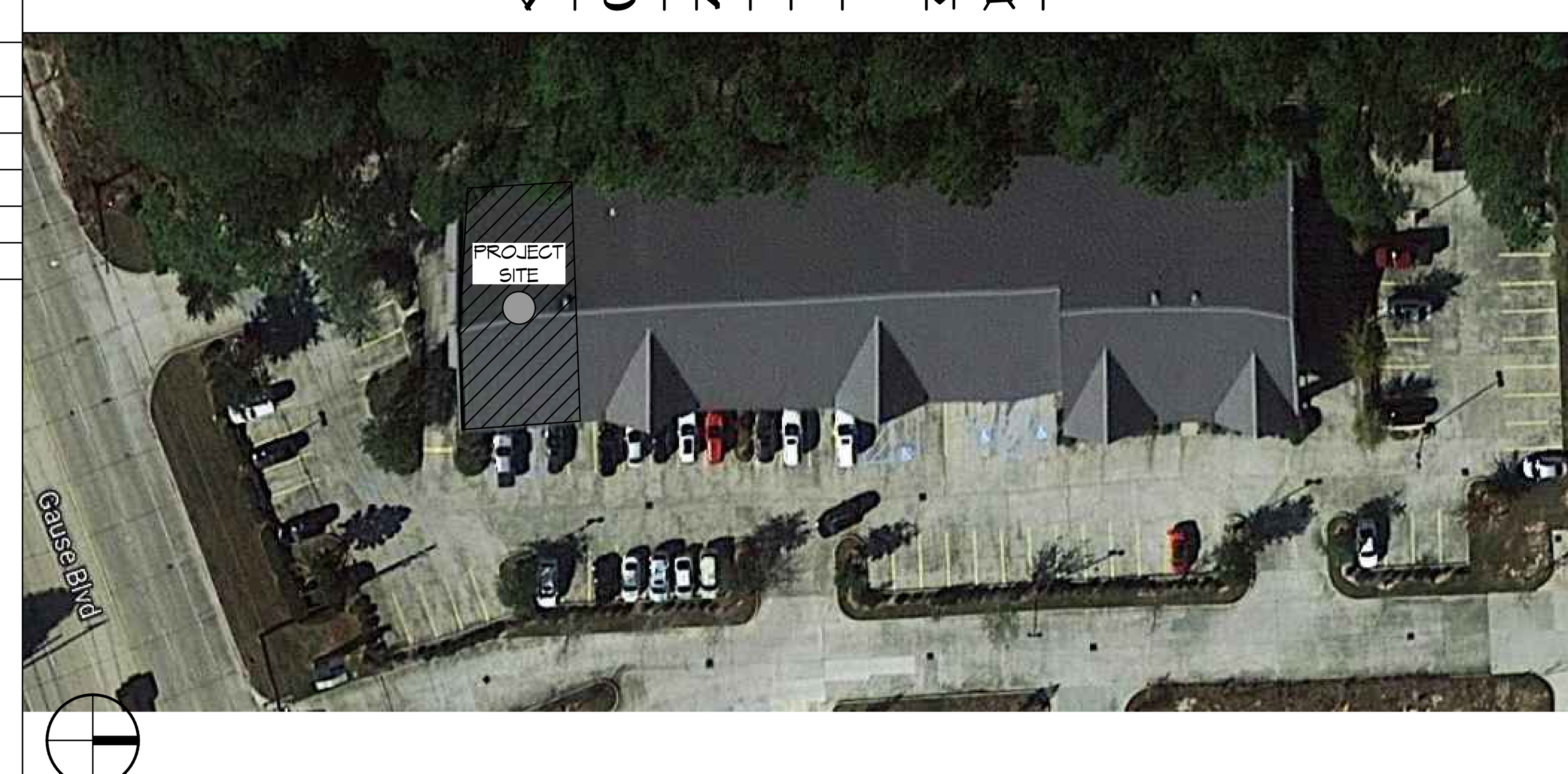

SHEET INDEX

SHEET #	SHEET TITLE
G101	COVER PAGE
C101	EXISTING SITE PLAN
A101	FLOOR PLAN
A102	REFLECTED CEILING PLAN
A103	INTERIOR ELEVATION PLAN
A104	MILLWORK DETAILS
M101	MECHANICAL PLAN
E101	ELECTRICAL POWER & LIGHTING PLAN

GENERAL NOTES

1. ALL MATERIALS AND WORK, INCIDENTAL TO THE CONSTRUCTION OF THIS PROJECT, SHALL CONFORM TO ALL GOVERNING CODES, AND REGULATIONS OF AGENCIES IN AUTHORITY.
2. CONTRACTOR SHALL PROVIDE ALL PUBLIC PROTECTIONS NECESSARY AS REQUIRED BY LAW.
3. THE DRAWINGS AND ANY SUBSEQUENTLY ISSUED ADDENDA, AMENDMENTS OR SUCH CHANGE ORDERS APPROVED BY THE OWNER AND THE CONTRACTOR ARE PART OF THESE CONTRACT DOCUMENTS.
4. **DO NOT SCALE DRAWINGS.** CONSULT WITH THE ENGINEER REGARDING ANY ITEMS IN THE CONTRACT DOCUMENTS THAT REQUIRE CLARIFICATION.
6. TRASH SHALL BE REMOVED FROM THE SITE NOT LESS THAN TWICE MONTHLY.
7. THE GENERAL CONTRACTOR SHALL VERIFY EXISTING CONDITIONS PRIOR TO COMMENCING WORK AND REPORT ANY AND ALL DISCREPANCIES TO THE ARCHITECT.
8. CONTRACTOR VEHICLES AND EQUIPMENT NECESSARY FOR CONSTRUCTION MAY BE PARKED ON THE SITE. OTHER VEHICLES PARKED ON THE SITE REQUIRE THE OWNER'S PERMISSION.
9. ALL MATERIALS/EQUIPMENT SHALL BE INSTALLED PER MANUFACTURER'S RECOMMENDATIONS. WORK NOT CONSISTENT WITH MANUFACTURER'S RECOMMENDATIONS WILL BE REJECTED.

DAMMON ENGINEERING, INC.
LOUISIANA & MISSISSIPPI
Chief Engineer: Brian Mistich, PE
554 Old Spanish Trail
Slidell, LA 70458
www.dammonengineering.com
info@dammonengineering.com
PH: 985.649.5832

#	DESCRIPTION	DATE
REVISIONS		

SEAL:

The above drawings and specifications, designs and arrangements ... and shall remain the property of Dammon Engineering, and no part ... disclosed to others, or used in connection with any work or project ... project for which the have been prepared and developed with ... Dammon Engineering. Visual contact with these drawings or specif... conclusive evidence of acceptance of the...

DENTAL OFFICE

PJ'S COFFEE

2040 GAUSE BLVD,
SLIDELL, LA 70461

JOB No:	2461	DATE:	10-18-2022
DRAWN BY:	CKD	CHECKED BY:	JMS

SHEET TITLE:
GENERAL INFORMATION SHEET

DRAWING NUMBER:
G101

SHEET No: 1 of 8

N

1 EXISTING SITE PLAN
SCALE: NTS

DAMMON
ENGINEERING, INC.
LOUISIANA & MISSISSIPPI
Chief Engineer: Brian Mistich, PE
554 Old Spanish Trail
Slidell, LA 70458
www.dammonengineering.com
info@dammonengineering.com
PH: 985.649.5832

#	DESCRIPTION	REVISIONS	DATE

SEAL:

DENTAL OFFICE
PJ'S COFFEE
2040 GAUSE BLVD,
SLIDELL, LA 70461

JOB No:	2461	DATE:	10-18-2022
DRAWN BY:	TNT	CHECKED BY:	JMS

The above drawings and specifications, designs and arrangements represented thereby are and shall remain the property of Dammon Engineering, and no part thereof shall be copied, disclosed to others, or used in connection with any work or project other than the specific project for which the have been prepared and developed without written consent of Dammon Engineering. Visual contact with these drawings or specifications shall constitute conclusive evidence of acceptance of these restrictions.

SHEET TITLE:
EXISTING SITE PLAN

DRAWING NUMBER:
C101

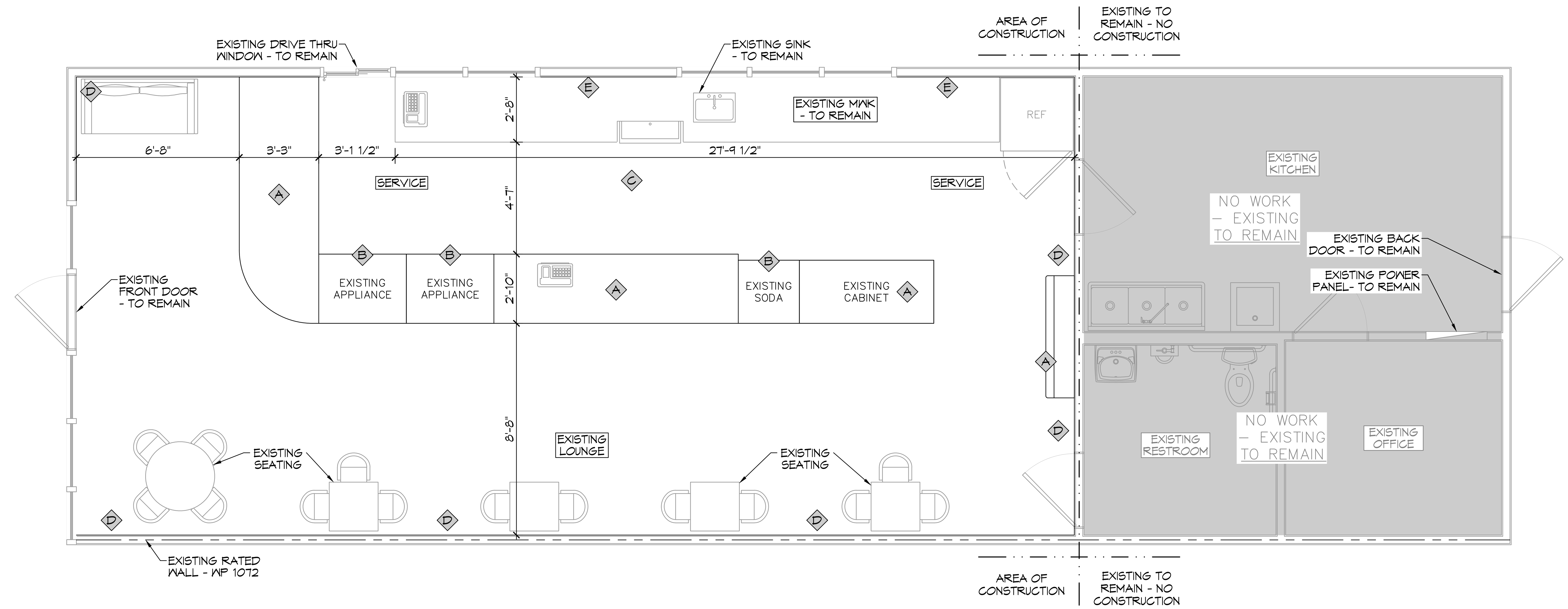

2 EXISTING DEMO FLOOR PLAN

SCALE: 3/8" = 1'-0"

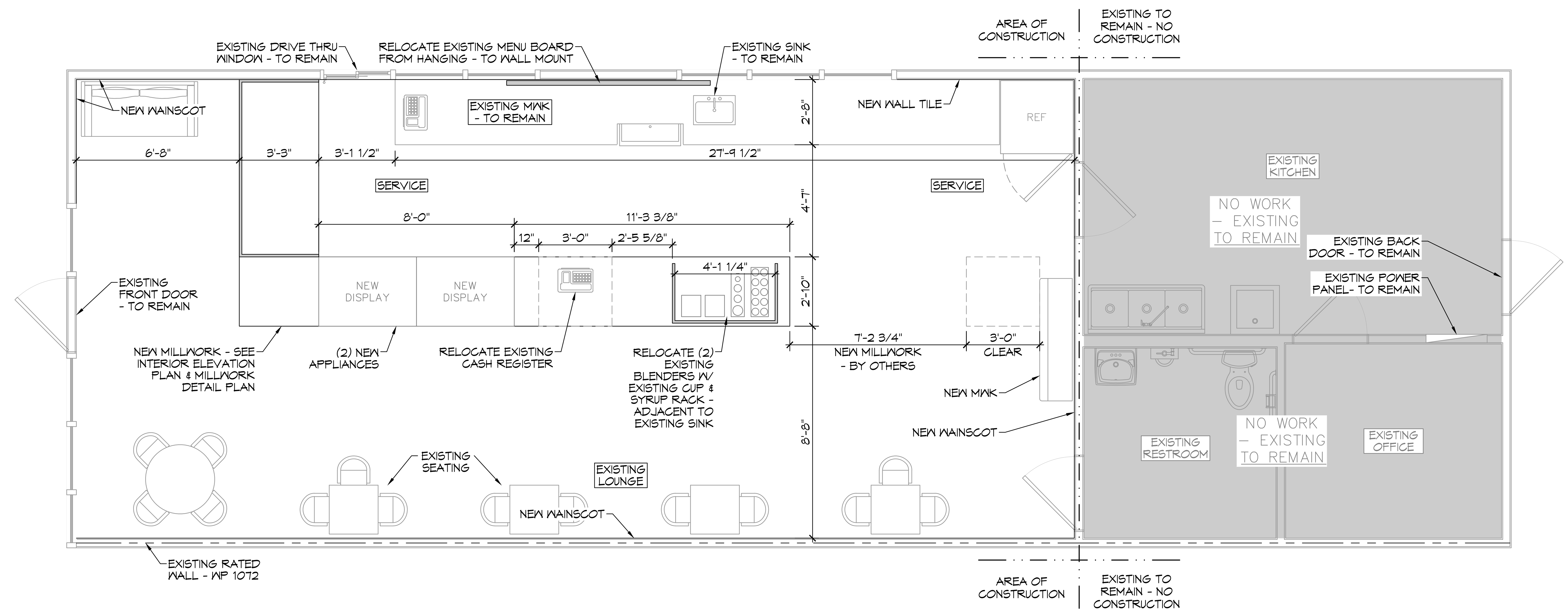

3 NEW FLOOR PLAN

SCALE: 3/8" = 1'-0"

GENERAL NOTES

1. INSULATION AND INSULATION ASSEMBLIES SHALL MEET THE REQUIREMENTS OF SECTION 719.
   A. CONCEALED INSULATION SHALL HAVE A FLAME SPREAD OF 0-25 AND SMOKE DEVELOPED INDEX OF 0-450. EXCEPT THAT IN COMBUSTIBLE (WOOD FRAME) CONSTRUCTION.
   B. FACING SHALL COMPLY WITH IBC 2006.
2. PROVIDE 5'X5' LANDINGS, LEVEL WITH FINISHED FLOOR, OUTSIDE EXTERIOR DOORS. THRESHOLDS SHALL BE NOT MORE THAN 1/2" IN HEIGHT AND SHALL BE BEVELED IF MORE THAT 1/4".
3. DIMENSIONS ARE TO CENTERLINE, FACE OF STUDS, CENTER OF COLUMNS, OR FACE OF VENEER.
4. CONTRACTOR TO VERIFY ALL SITE CONDITIONS, BUILDING LOCATIONS, AND DIMENSIONS PRIOR TO CONSTRUCTION.
5. MATERIALS SHALL BE NEW AND U.L. LISTED.
6. NO WORK SHALL BE CONCEALED UNTIL APPROVED BY LOCAL INSPECTORS.
7. CONSTRUCTION SHALL COMPLY WITH ALL PARISH, STATE, AND LOCAL CODES.
8. CONTRACTOR TO GUARANTEE WORK FOR ONE YEAR.
9. CONTRACTOR SHALL FURNISH WATER AND POWER FROM EXISTING SOURCES.
10. EXTERIOR CAULK SHALL BE DOW CORNING 790 SILICONE, INSTALL IN ACCORDANCE WITH MANUFACTURER RECOMMENDATIONS. COORDINATE WITH ARCHITECT/OWNER AS TO COLOR. INTERIOR CAULKING TO BE EQUAL TO DAP PAINTABLE LATEX WITH SILICONE.
11. PAINT GRADE TO SHALL BE SHERWIN WILLIAMS OR EQUIVALENT. ALL WORK TO RECEIVE 3 COATS. COLOR SELECTION BY OWNER.
12. PROVIDE CLEANUP ON A REGULAR BASIS. NO TRASH STORED IN BUILDING.
13. ALL BATT INSULATION SHALL HAVE A CLASS "A" (0-25) FLAME SPREAD IN COMPLIANCE WITH APPLICABLE CODE.
14. USE 6" STUDS, OR 4" STAGGERED STUDS AT ALL PLUMBING WALLS.
15. PROVIDE GALVANIZED METAL PAN WITH DRAIN AT WATER HEATER LOCATION.
16. ALL CORNERS SHALL BE PROPERLY BRACED FOR WIND LOADS. A 48" SHEATHING SHALL BE PROVIDED EVERY 20' OF WALL LENGTH.
17. FLOORING SHALL BE NON-SLIP.
18. INTERIOR LOCKS ON DOORS IN MEANS OF EGRESS SHALL NOT REQUIRE THE USE OF A KEY, SPECIAL KNOWLEDGE, OR SPECIAL DEVICE TO OPEN IN THE DIRECTION OF EGRESS. ALL DOORS SHALL HAVE LEVER TYPE HANDLES.
19. INTERIOR WALLS AND CEILINGS SHALL HAVE A FLAME SPREAD OF 0-200 AND A SMOKE DEVELOPMENT RATING OF 0-450.
20. ALL WORK SHALL COMPLY WITH THE LATEST EDITION OF ALL LOCAL, STATE, AND NATIONAL CODES COVERING THE TYPE OF WORK BEING PERFORMED.
21. PROVIDE PORTABLE FIRE EXTINGUISHERS IN ACCORDANCE WITH NFPA 101. SEE APPENDIX "E" OF NFPA 101 FOR DISTRIBUTION OF EXTINGUISHERS.
22. ALL FIRE WALLS SHALL EXTEND TIGHT TO ROOF SHEATHING, AND BE SEALED WITH AN APPROVED FIRE CAULK.
23. ALL ELECTRICAL, MECHANICAL, AND PLUMBING MATERIALS PENETRATING FIRE WALLS SHALL BE FIRE CAULKED. (PENETRATIONS THROUGH RATED CONSTRUCTION SHALL BE SEALED WITH A MATERIAL CAPABLE OF PREVENTING THE PASSAGE OF FLAMES AND HOT GASES WHEN TESTED IN ACCORDANCE WITH ASTM-E814.)
24. SERVICE COUNTER SHALL HAVE A HCP ACCESSIBLE WRITING SURFACE, MAX. 36" FROM F.F. (ADAAG MANUAL 1998, PG 135)

DEMO LEGEND

A	DEMO MILLWORK - NEW MILLWORK SEE INTERIOR PLAN AND MILLWORK DETAIL PLAN
B	DEMO APPLIANCES - REPLACE WITH NEW SEE OWNER FOR APPLIANCE INFORMATION
C	DEMO CEILING - NEW DECORATIVE TILE & FUR DOWN SEE INTERIOR ELEVATION & REFLECTED CEILING PLAN
D	DEMO EXISTING WAINSCOTING - NEW WAINSCOTING SEE INTERIOR ELEVATION AND MILLWORK PLAN
E	DEMO WALL FINISH - NEW DECORATIVE TILE SEE INTERIOR ELEVATION AND MILLWORK PLAN

GA FILE
WP-1072 GENERIC

ONE LAYER 5/8" TYPE X GYPSUM WALLBOARD OR GYPSUM VENEER BASE APPLIED PARALLEL OR AT RIGHT ANGLES TO EACH SIDE OF 3-5/8" STEEL STUDS 24" O.C. WITH 1" TYPE S DRYWALL SCREWS 8" O.C. AT VERTICAL JOINTS AND 12" O.C. AT FLOOR AND CEILING RUNNERS AND INTERMEDIATE STUDS.

JOINTS STAGGERED 24" ON EACH SIDE AND ON OPPOSITE SIDES. SOUND TESTED WITH 3-12" GLASS FIBER FRICTION FIT IN STUD SPACE. (NON-LOAD BEARING)

1 HOUR FIRE   45 TO 49 STC SOUND

THICKNESS:	4-7/8"
APPROX. WEIGHT:	6 PSF
FIRE TEST:	SEE WP 1200 (FM WP-45, 6-19-68); OSU T-1770, 8-61; ULC 79T484, 79T500, 79T497, 8-12-81, ULC DESIGN W415)
SOUND TEST:	NRCC 816-NV, 2-3-81

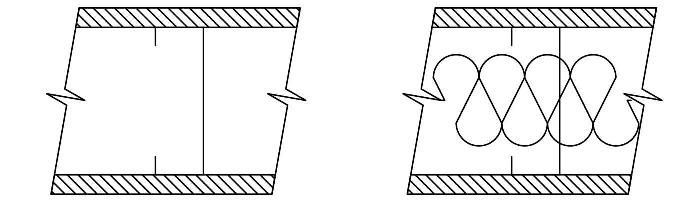

DAMMON ENGINEERING, INC.
LOUISIANA & MISSISSIPPI
Chief Engineer: Brian Mistich, PE
554 Old Spanish Trail
Slidell, LA 70458
www.dammonengineering.com
info@dammonengineering.com
PH: 985.649.5832

#	DESCRIPTION	DATE

REVISIONS

SEAL:

DENTAL OFFICE
P J ' S COFFEE
2040 GAUSE BLVD,
SLIDELL, LA 70461

JOB No:	2461	DATE:	10-18-2022
DRAWN BY:	TNT	CHECKED BY:	JMS

The above drawings and specifications, designs and arrangements represented thereby are and shall remain the property of Dammon Engineering, and no part thereof shall be copied, disclosed to others, or used in connection with any work or project other than the specific project for which the have been prepared and developed without written consent of Dammon Engineering. Visual contact with these drawings or specifications shall constitute conclusive evidence of acceptance of these restrictions.

SHEET TITLE:
FLOOR PLAN

DRAWING NUMBER:
A101

SHEET No: 3 of 8

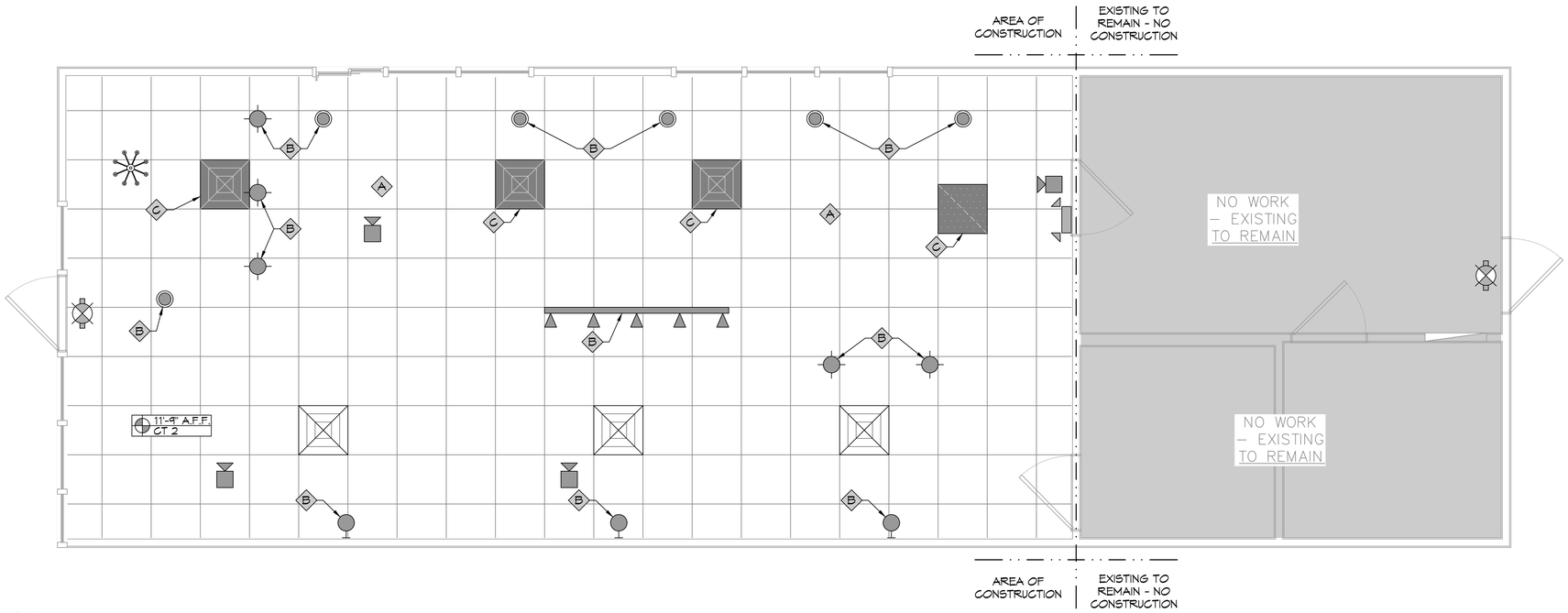

4 EXISTING DEMO REFLECTED CEILING PLAN
SCALE: 3/8" = 1'-0"

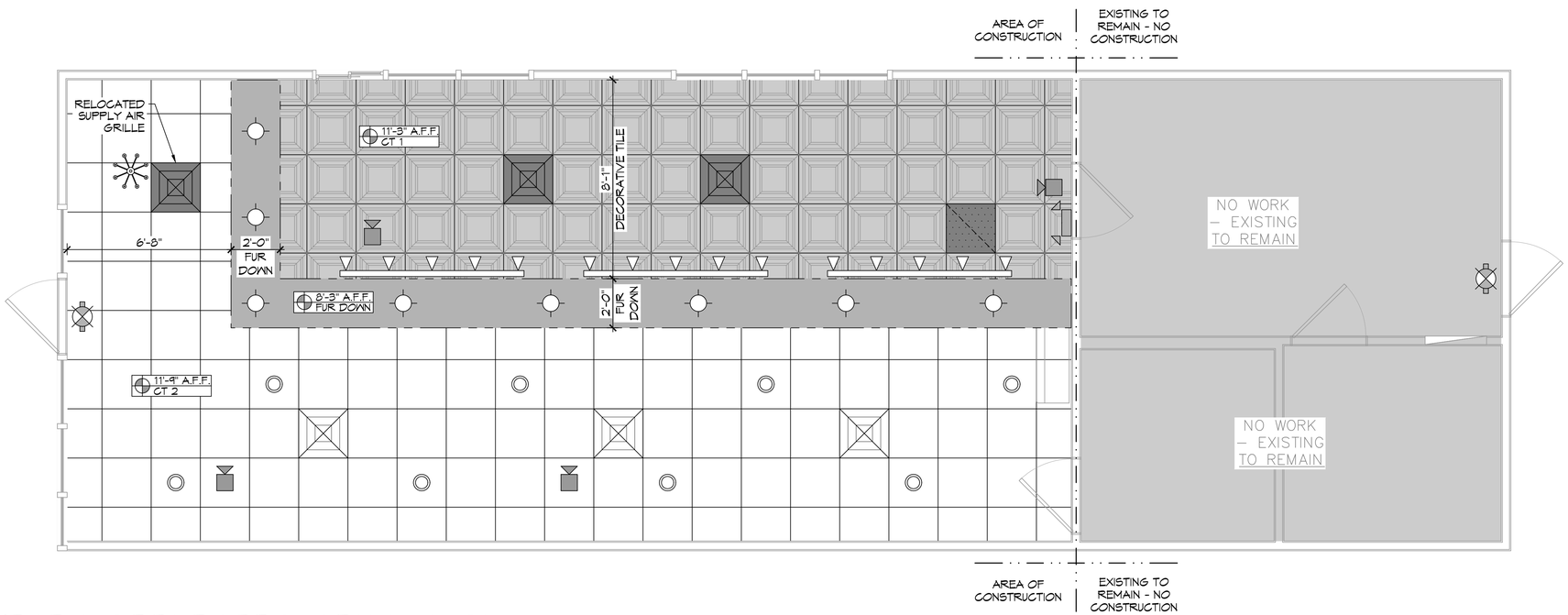

5 NEW REFLECTED CEILING PLAN
SCALE: 3/8" = 1'-0"

REFLECTED CEILING LEGEND

- EXISTING 2X2 CEILING TILE
- NEW 2x2 DECORATIVE CEILING TILE
- NEW FUR DOWN
- EXISTING SECURITY CAMERA - TO REMAIN
- EXISTING EXIT LIGHT - TO REMAIN
- EXISTING EMERGENCY LIGHT - TO REMAIN
- EXISTING DECORATIVE LIGHT - TO REMAIN
- EXISTING WALL SCONCE
- EXISTING CAN LIGHT
- NEW CAN LIGHT
- EXISTING PENDANT LIGHT
- NEW PENDANT LIGHT
- EXISTING TRACK LIGHT
- NEW TRACK LIGHT
- EXISTING RETURN AIR GRILLE - TO REMAIN
- EXISTING SUPPLY AIR GRILLE - TO REMAIN
- EXISTING SUPPLY AIR GRILLE - TO BE RELOCATED
- EXISTING SUPPLY AIR GRILLE - NEW LOCATION

DEMO LEGEND

- A DEMO CEILING TILE FOR NEW DECORATIVE TILE
- B DEMO LIGHT FIXTURE
- C RELOCATE SUPPLY/RETURN AIR GRILLE - SEE MECHANICAL PLAN

DAMMON ENGINEERING, INC.
LOUISIANA & MISSISSIPPI
www.dammonengineering.com
info@dammonengineering.com
PH: 985.649.5832
Chief Engineer: Brian Mistich, PE
554 Old Spanish Trail
Slidell, LA 70458

REVISIONS

#	DESCRIPTION	DATE

SEAL:

DENTAL OFFICE
PJ'S COFFEE
2040 GAUSE BLVD, SLIDELL, LA 70461

JOB No: 2461 DATE: 10-18-2022
DRAWN BY: TNT CHECKED BY: JMS

SHEET TITLE:
REFLECTED CEILING PLAN

DRAWING NUMBER:
A102

SHEET No: 4 of 8

FINISH SCHEDULE

MARK	TYPE	MFG #	NOTES
WALLS			
P01	PAINT	BENJAMIN MOORE, #OC-96	COLOR: GENTLE CREAM. FINISH: EGGSHELL
P02	FLAT SUB - WAY TILE	PRO SPEC TILE, USCT #U072	COLOR: SNOW WHITE BRIGHT. SIZE: 3"x6". GROUT: MED GRAY W/ 4" FIR CAP. FINISH: MED DARK WALNUT STAINED TO MATCH TABLE TOPS.
P03	FIR WOOD	-	FINISH: MEDIUM DARK WALNUT STAINED MATCH TABLE TOPS
P04	WAINSCOT	BY OWNER	WOOD BEAD BOARD PANELS. LOW GRAIN FINISH. COLOR: P01 (DISTRESSED) W/ BASE BOARD & CAP BB2.
CEILING			
CT1	ACOUSTIC CEILING TILE	CEILUME, MADISON, V3-MAD-22SAO	WASHABLE, COFFERED
CT2	ACOUSTIC CEILING TILE	CEILUME, SERENITY, V3- SEREN-22BKO	WASHABLE
SOLID SURFACE FINISH			
SS1	VIATERA QUARTZ	-	COLOR: MUSE. EDGING: EASED. DIVIDER TO BE POLISHED
SS3	OUTER LAMINATE	LAMIN-ART, 7973K-12	COLOR: OLD MILL OAK. FINISH: SOFT GRAIN W/ AEON
SS4	INNER LAMINATE	BY OWNER	COLOR: BLACK. FINISH: MATTE
SS5	MARLITE FRP	-	COLOR: P-807 BLOCK. PROVIDE ALL NECESSARY TRIMS & ACCESSORIES TO FINISH EXPOSED EDGES & SEAMS
BASE BOARD			
BB1	RUBBER	JOHNSONITE	HEIGHT" 6". COLOR: 63 BURNT UMBER
BB2	FIR WOOD	-	1x6 FIR W/ BASE CAP, FINISH: PAINT P-1

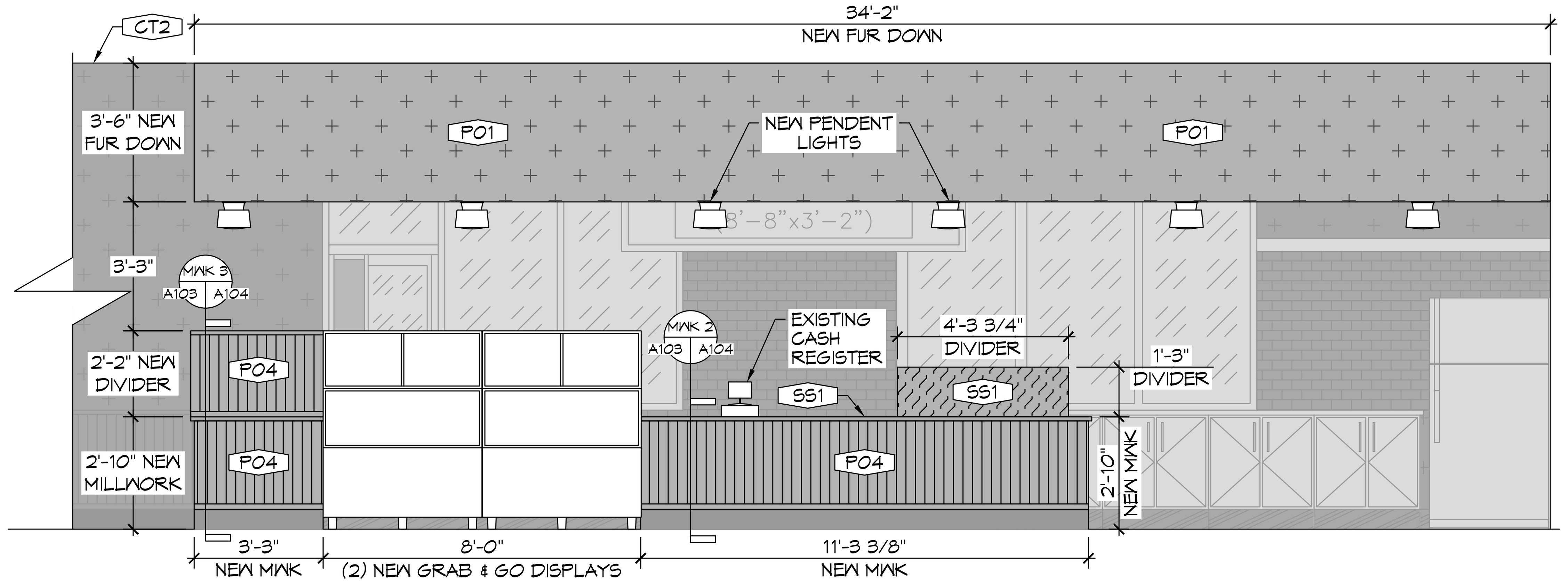

6 INTERIOR ELEVATION
SCALE: 3/8" = 1'-0"

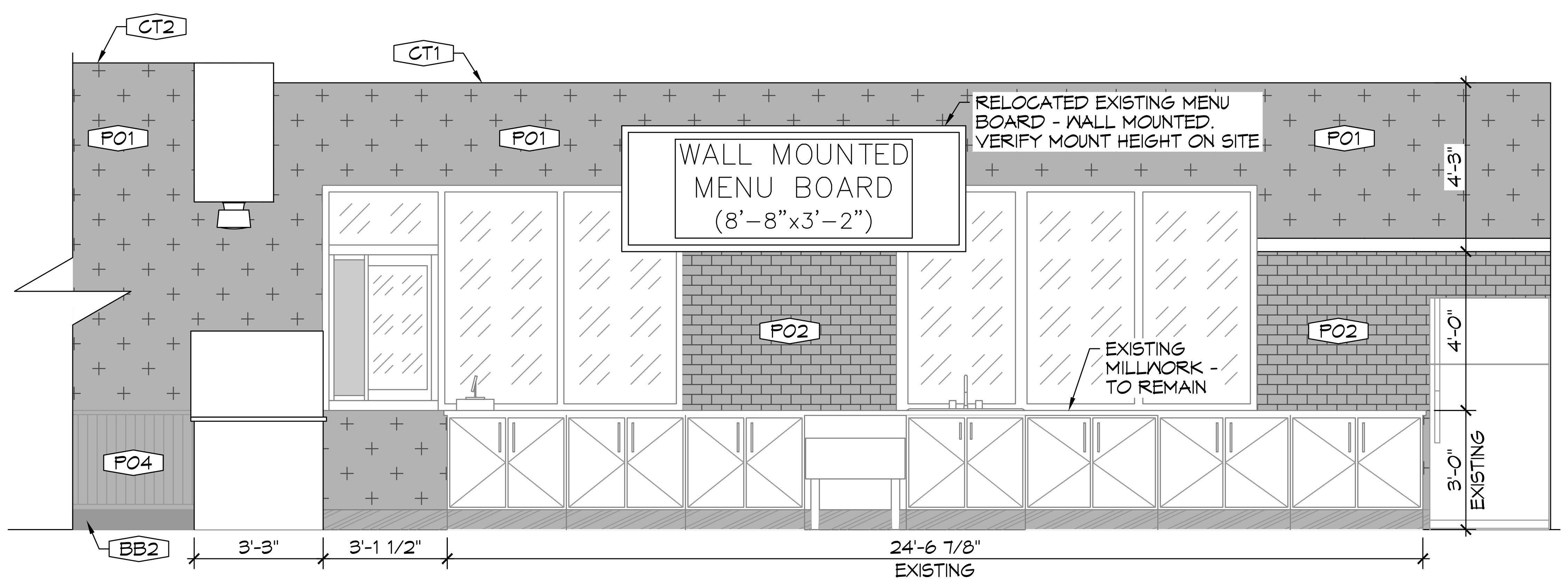

7 INTERIOR ELEVATION
SCALE: 3/8" = 1'-0"

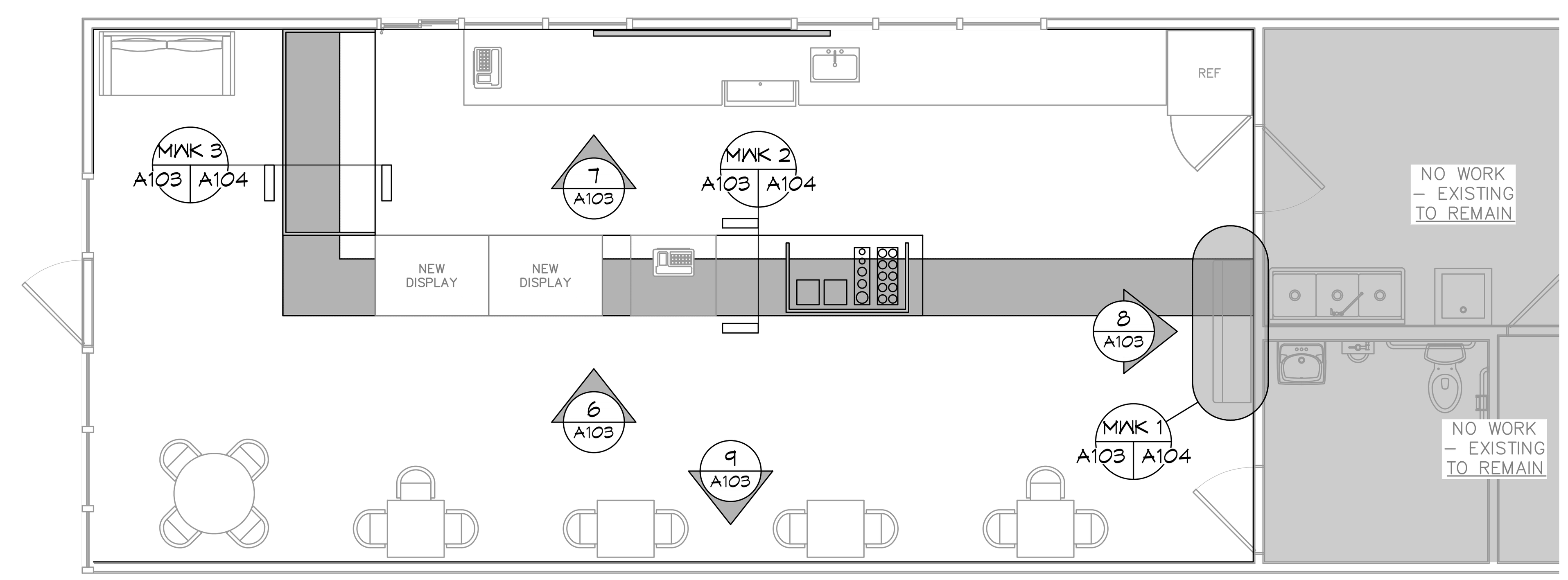

KEY PLAN
SCALE: NTS

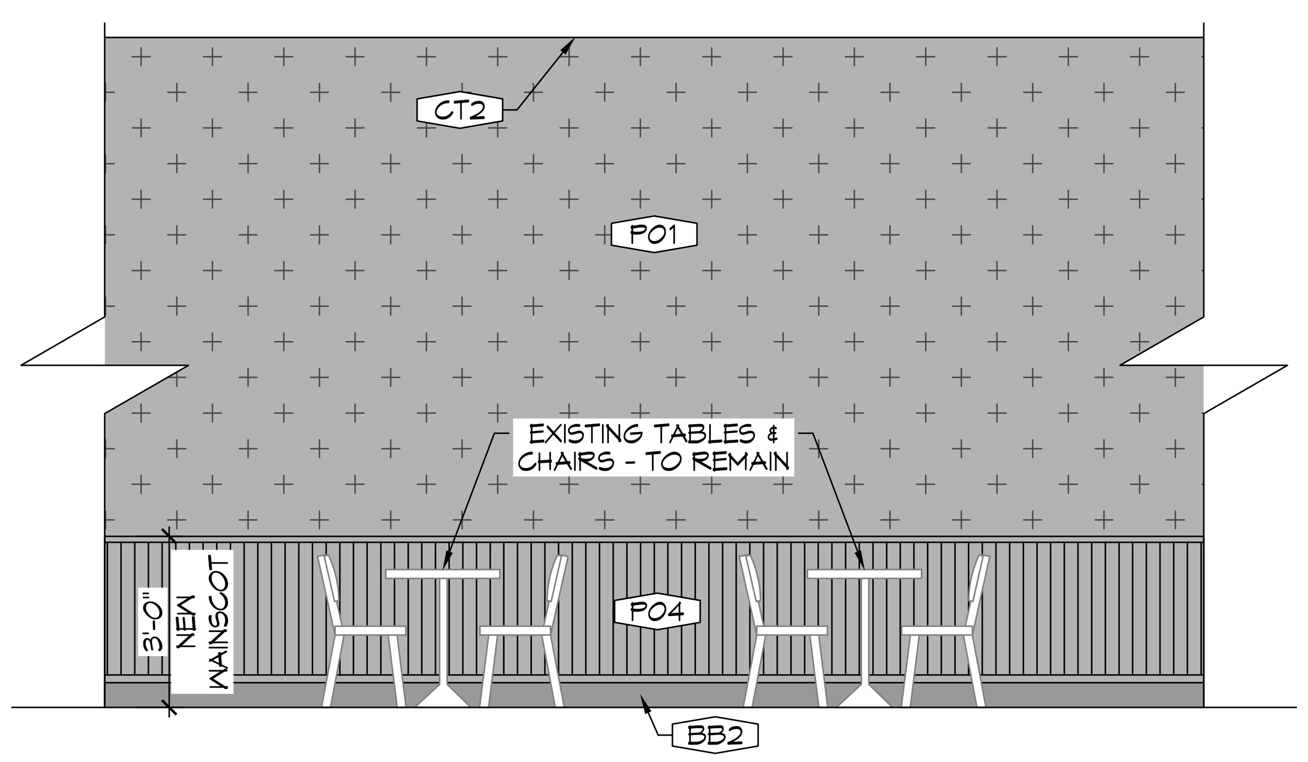

8 INTERIOR ELEVATION
SCALE: 3/8" = 1'-0"

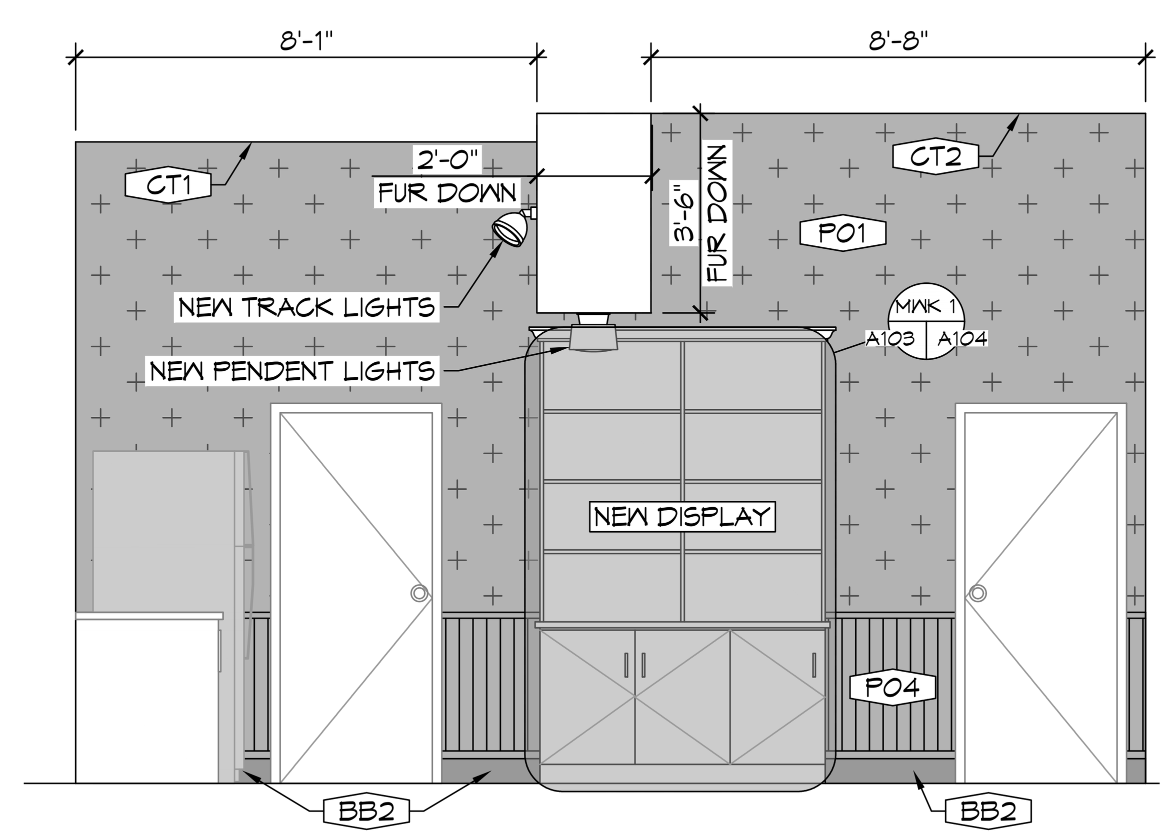

9 INTERIOR ELEVATION
SCALE: 3/8" = 1'-0"

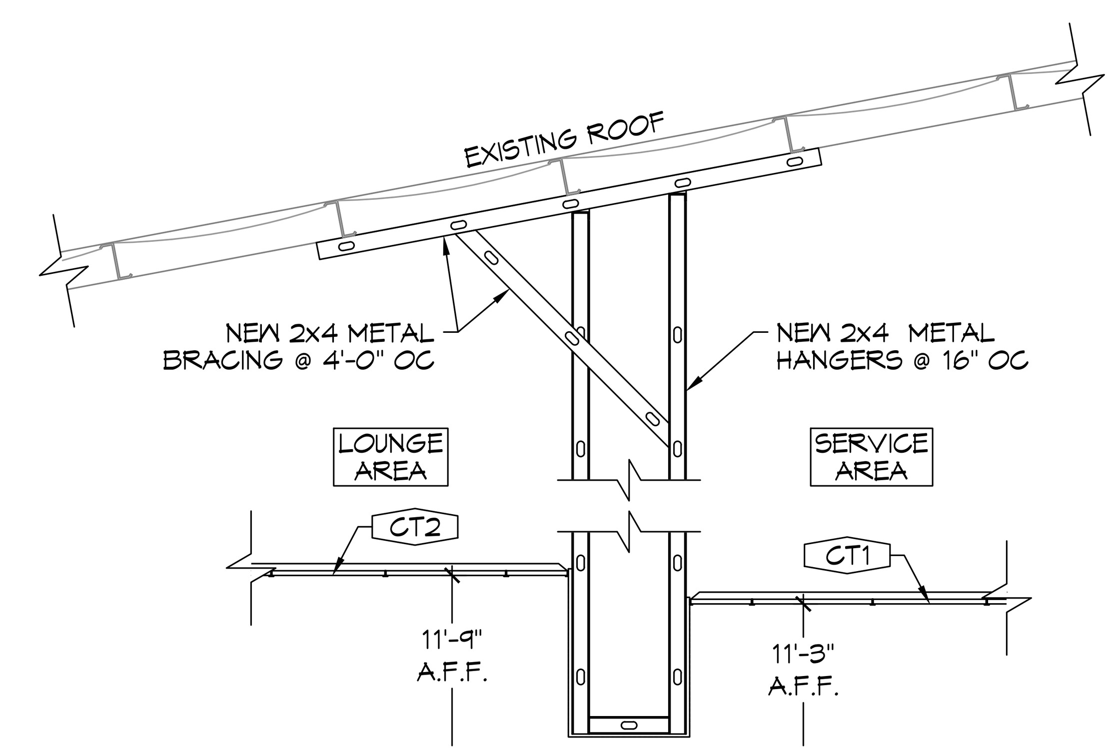

FUR DOWN SECTION
SCALE: 3/8" = 1'-0"
TYPICAL

DAMMON ENGINEERING, INC.
LOUISIANA & MISSISSIPPI
Chief Engineer: Brian Mistich, PE
554 Old Spanish Trail
Slidell, LA 70458
www.dammonengineering.com
info@dammonengineering.com
PH: 985.649.5832

REVISIONS

#	DESCRIPTION	DATE

SEAL:

DENTAL OFFICE
PJ'S COFFEE
2040 GAUSE BLVD, SLIDELL, LA 70461

JOB No: 2461 DATE: 10-18-2022
DRAWN BY: TNT CHECKED BY: JMS

SHEET TITLE: INTERIOR ELEVATION

DRAWING NUMBER: A103

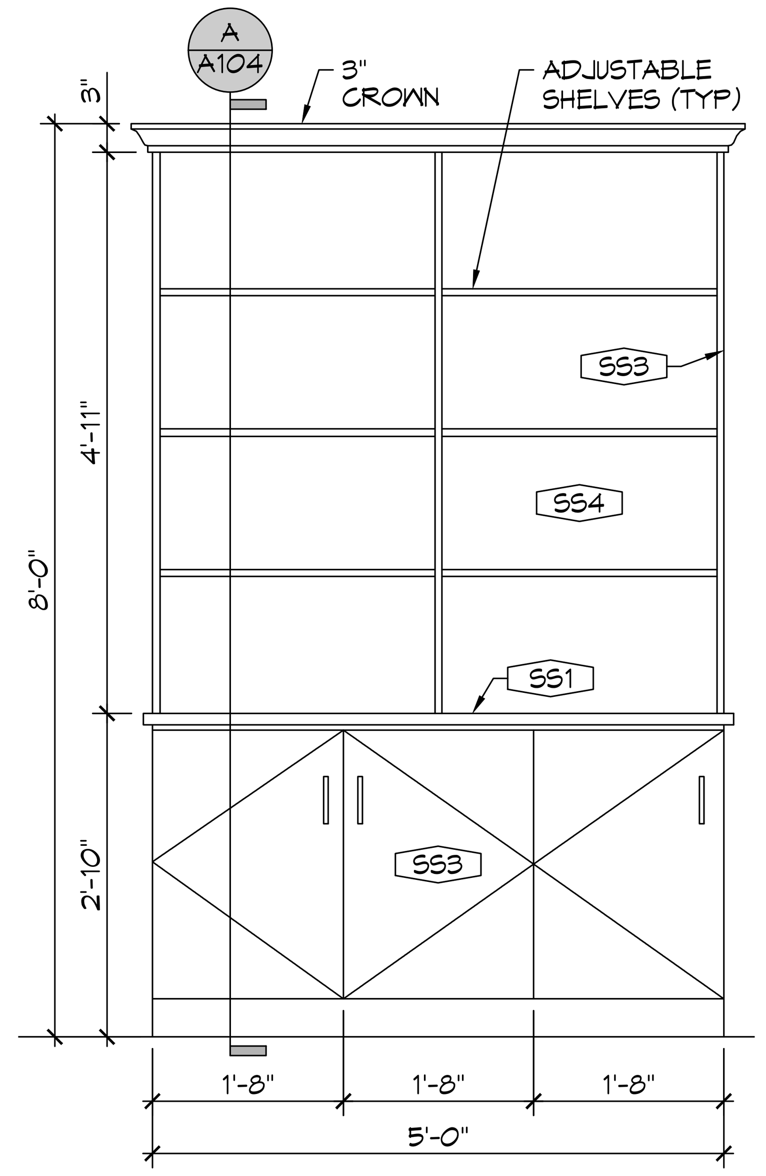

MWK 1 DISPLAY SHELF
SCALE: 3/4" = 1'-0"
MWK 1

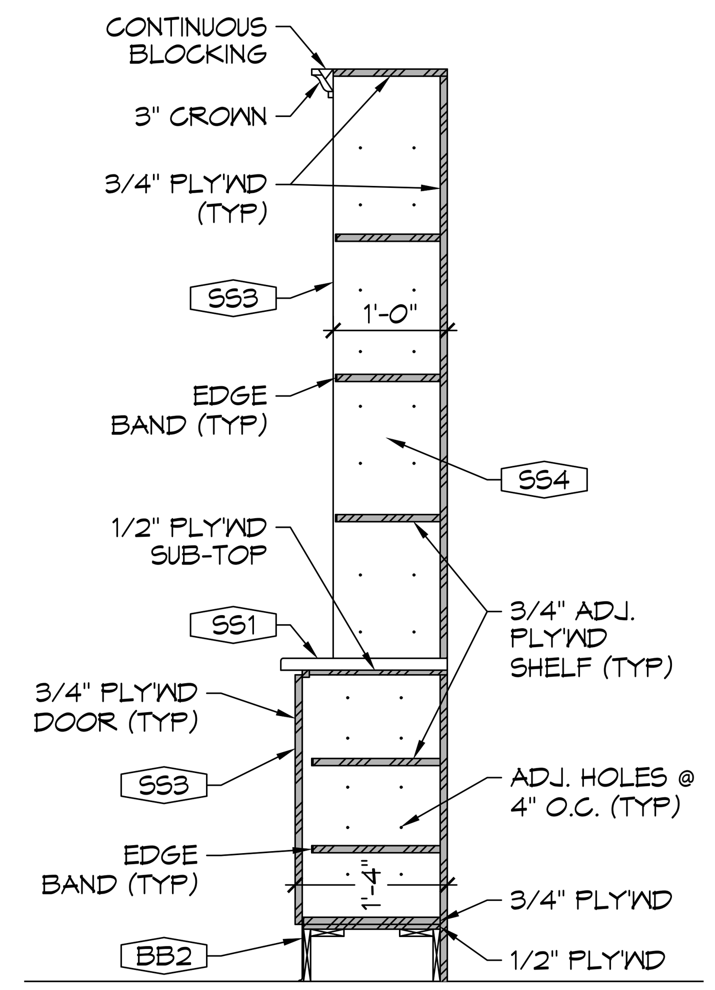

A DISPLAY SHELF SECTION
SCALE: 3/4" = 1'-0"

FINISH SCHEDULE

MARK	TYPE	MFG #	NOTES
WALLS			
P01	PAINT	BENJAMIN MOORE, #OC-96	COLOR: GENTLE CREAM. FINISH: EGGSHELL
P02	FLAT SUB - WAY TILE	PRO SPEC TILE, USCT #U072	COLOR: SNOW WHITE BRIGHT. SIZE: 3"x6". GROUT: MED GRAY W/ 4" FIR CAP. FINISH: MED DARK WALNUT STAINED TO MATCH TABLE TOPS.
P03	FIR WOOD	-	FINISH: MEDIUM DARK WALNUT STAINED MATCH TABLE TOPS
P04	WAINSCOT	BY OWNER	WOOD BEAD BOARD PANELS. LOW GRAIN FINISH. COLOR: P01 (DISTRESSED) W/ BASE BOARD & CAP BB2.
CEILING			
CT1	ACOUSTIC CEILING TILE	CEILUME, MADISON, V3-MAD-22SAO	WASHABLE, COFFERED
CT2	ACOUSTIC CEILING TILE	CEILUME, SERENITY, V3- SEREN-22BKO	WASHABLE
SOLID SURFACE FINISH			
SS1	VIATERA QUARTZ	-	COLOR: MUSE. EDGING: EASED. DIVIDER TO BE POLISHED
SS2	LAMINATE SURFACE	WILSONART, 090-06	COLOR: NORTH SEA. FINISH: MATTE
SS3	OUTER LAMINATE	LAMIN-ART, 7973K-12	COLOR: OLD MILL OAK. FINISH: SOFT GRAIN W/ AEON
SS4	INNER LAMINATE	BY OWNER	COLOR: BLACK. FINISH: MATTE
SS5	MARLITE FRP	-	COLOR: P-807 BLOCK. PROVIDE ALL NECESSARY TRIMS & ACCESSORIES TO FINISH EXPOSED EDGES & SEAMS
BASE BOARD			
BB1	RUBBER	JOHNSONITE	HEIGHT" 6". COLOR: 63 BURNT UMBER
BB2	FIR WOOD	-	1x6 FIR W/ BASE CAP, FINISH: PAINT P-1

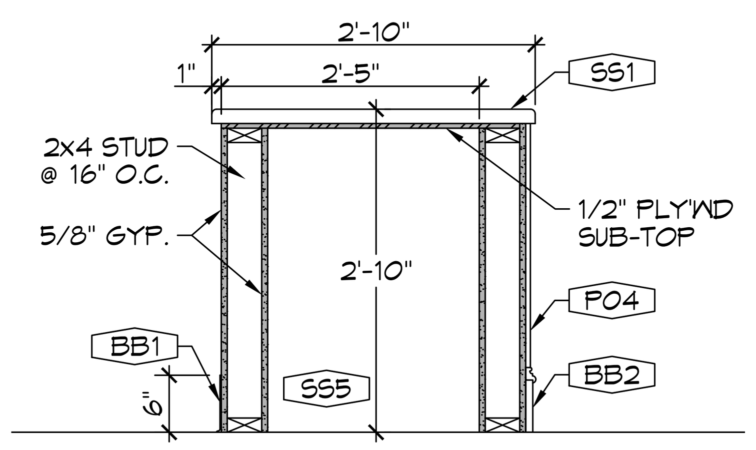

MWK 2 FRONT MILL WORK
SCALE: 3/4" = 1'-0"
MWK 2

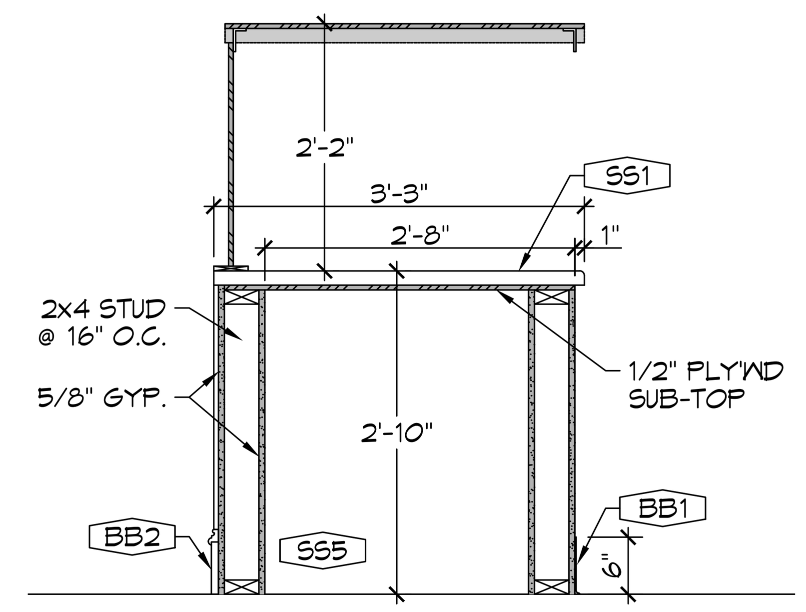

MWK 3 SIDE MILLWORK
SCALE: 3/4" = 1'-0"
MWK 3

P02 WALL TILE SECTION
SCALE: 3/4" = 1'-0"

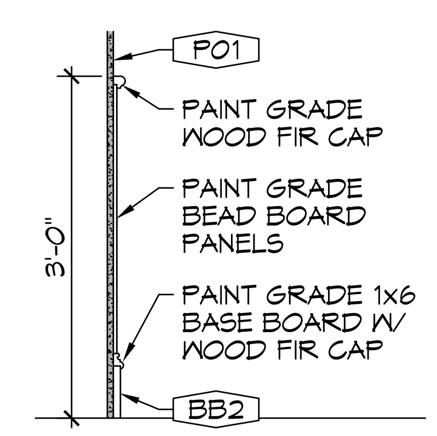

P04 WAINSCOT SECTION
SCALE: 3/4" = 1'-0"

DAMMON ENGINEERING, INC.
LOUISIANA & MISSISSIPPI
Chief Engineer: Brian Mistich, PE
554 Old Spanish Trail
Slidell, LA 70458
www.dammonengineering.com
info@dammonengineering.com
PH: 985.649.5832

REVISIONS

#	DESCRIPTION	DATE

SEAL:

DENTAL OFFICE
PJ'S COFFEE
2040 GAUSE BLVD,
SLIDELL, LA 70461

JOB No: 2461 DATE: 10-18-2022
DRAWN BY: TNT CHECKED BY: JMS

The above drawings and specifications, designs and arrangements represented thereby are and shall remain the property of Dammon Engineering, and no part thereof shall be copied, disclosed to others, or used in connection with any work or project other than the specific project for which the have been prepared and developed without written consent of Dammon Engineering. Visual contact with these drawings or specifications shall constitute conclusive evidence of acceptance of these restrictions.

SHEET TITLE:
MILLWORK DETAILS

DRAWING NUMBER:
A104

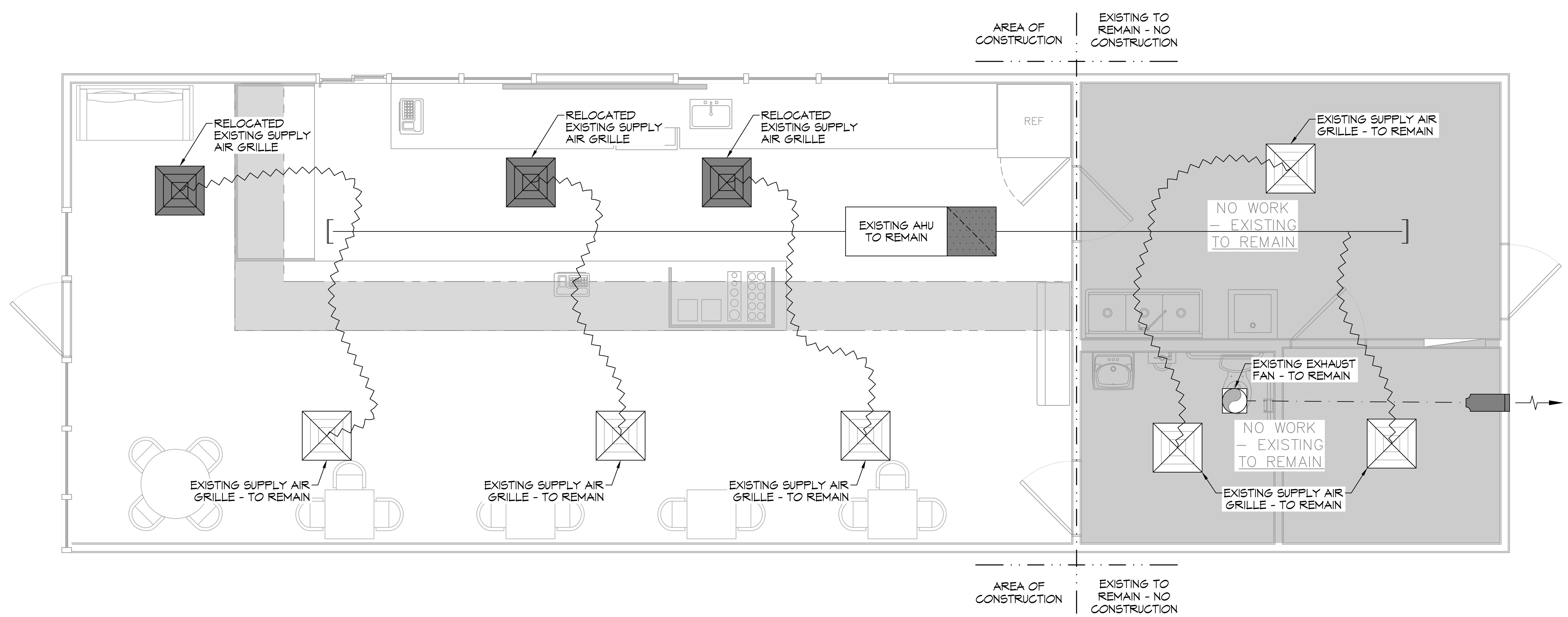

11 MECHANICAL PLAN
SCALE: 3/8" = 1'-0"

GENERAL NOTES

1. CONCEALED DUCTWORK TO BE GALVANIZED SHEET METAL WRAPED WITH FIBROUS GLASS DUCT WRAP WITH FSK VAPOR BARRIER, MIN R-6. INSTALLED PER SMACNA STANDARDS. DUCT WORK IMMEDIATELY DOWNSTREAM FROM RTU SHALL BE LINED FOR SOUND ATTENUATION.
2. EXPOSED DUCTWORK TO BE GALVANIZED SHEET METAL LINED WITH FIBROUS GLASS DUCT LINER, MIN R-6. INSTALLED PER SMACNA STANDARDS.
3. ROUND FLEXIBLE DUCT TO BE UL-181, CLASS 1, AIR DUCT MATERIALS.
4. DUCT SIZES SHOWN ARE CLEAR INSIDE DIMENSIONS.
5. IN ALL SYSTEMS OVER 2000 CFM AND LESS THAN 15,000 CFM, SMOKE DETECTORS SHALL BE INSTALLED IN ACCORDANCE WITH NFPA 72E IN THE RETURN DUCT DOWNSTREAM OF THE AIR HANDLING UNIT AND ALL FILTERS TO AUTOMATICALLY STOP THE FAN.
6. PROVIDE UL LISTED 125 'F' FIRESTAT IN RETURN AIR OF EACH SYSTEM UNDER 2000 CFM TO SHUT DOWN THE FAN IN THE EVENT OF FIRE.
7. PROVIDE UL RATED FIRE DAMPERS WHERE REQUIRED AT ALL DUCT PENETRATIONS OF FIRE-RATED ASSEMBLIES AND WHERE REQUIRED BY CODE, INCLUDING OUTSIDE AIR INTAKES AND EXHAUST FANS.
8. CONDENSATE DRAINS TO BE PVC PIPE RUN TO PLUMBERS P-TRAP WITHIN FIVE FEET OF AIR HANDLING UNITS.
9. ALL AIR HANDLING SYSTEMS TO BE BALANCED TO ASSURE PROPER AIR FLOWS PER PLANS.
10. ALL THERMOSTATS TO BE AUTOMATIC CHANGEOVER WITH HEAT SWITCH.
11. EXHAUST FAN SHALL BE CONTROLLED BY A SWITCH ON THE WALL IN THE SAME LOCATION AS LIGHT SWITCH(S). PROVIDE BACK DRAFT DAMPER.
12. PROVIDE AND INSTALL WATER PROOF GRILLE VENT IN PROPER ROOF LOCATION FOR PLUMBING FIXTURE EXHAUST.
13. ALL SUPPLY AIR VENTS SHALL BE EQUIPPED WITH AIR CONTROL DAMPERS AT THE REGISTER.
14. LOCATE OUTDOOR UNITS AS SHOWN ON ARCHITECTURAL DRAWINGS.
15. REFRIGERANT LINES SHALL BE SIZED BY UNIT MANUFACTURER AND INSTALLED ACCORDING TO MANUFACTURER'S INSTRUCTIONS.
16. FRESH AIR SHALL BE SUPPLIED TO EACH AIR HANDLER THROUGH EXTERIOR WALL DUCT SUPPLIED WITH A CONTROL DAMPER.
17. ALL ELECTRICAL, MECHANICAL, AND PLUMBING PENETRATING FIRE WALLS SHALL BE FIRE CAULKED. (PENETRATIONS THROUGH RATED CONSTRUCTION SHALL BE SEALED WITH A MATERIAL CAPABLE OF PREVENTING THE PASSAGE OF FLAMES AND HOT GASES WHEN TESTED IN ACCORDANCE WITH ASTM-E8-14).
18. ALL MECHANICAL SYMBOLS ARE DRAWN DIAGRAMMATICALLY, CONTRACTOR TO VERIFY WITH OWNER LOCATIONS OF VENTS, DAMPERS, REGISTERS, ETC.
19. FLEXIBLE DUCTWORK LENGTH NOT TO EXCEED 12'-0". SUPPORT FLEX DUCT TO PREVENT SAGGING
20. REFER TO REFLECTED CEILING PLAN FOR FINAL GRILLE AND DIFFUSER LOCATIONS AND COORDINATE AS REQUIRED.
21. FINAL LOCATION OF TEMPERATURE CONTROLS TO BE COORDINATED WITH OWNER AT JOB SITE.
22. PROVIDE AND INSTALL SMOKE DETECTORS AS APPROVED BY LOCAL AHJ'S. PLACE NEAR R/A AND S/A OPENINGS OF AHU AND PROVIDE, WITH ACCESS PANEL, WIRING BY ELECTRICAL CONTRACTOR.
23. FRESH AIR INTAKES ARE REQUIRED TO HAVE MOTORIZED OR GRAVITY DAMPERS TO SHUT OFF WHEN SYSTEM IS NOT RUNNING.
24. PROVIDE BIRD SCREENS AT ALL EXTERIOR MECHANICAL PENETRATIONS.
25. COORDINATE WALL MOUNTED THERMOSTAT LOCATIONS WITH ALL OWNER FURNISHED ITEMS EITHER WALL MOUNTED OR FLOOR MOUNTED AGAINST PARTITIONS. REFER TO ARCHITECTURAL DRAWINGS.
26. PROVIDE MIN 18 GA GALVANIZED SHEET METAL TO BLANK-OFF GABLE VENTS WHERE INTAKE/EXHAUST DUCTS OCCUR.

LEGEND

- NEW FUR DOWN
- EXISTING RETURN AIR GRILLE - TO REMAIN
- EXISTING SUPPLY AIR GRILLE - TO REMAIN
- EXISTING SUPPLY AIR GRILLE - TO BE RELOCATED
- EXISTING SUPPLY AIR GRILLE - NEW LOCATION

DAMMON ENGINEERING, INC.
LOUISIANA & MISSISSIPPI
Chief Engineer: Brian Mistich, PE
554 Old Spanish Trail
Slidell, LA 70458
www.dammonengineering.com
info@dammonengineering.com
PH: 985.649.5832

#	DESCRIPTION	DATE
	REVISIONS	

SEAL:

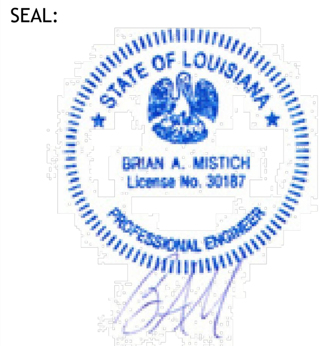

DENTAL OFFICE
PJ'S COFFEE
2040 GAUSE BLVD,
SLIDELL, LA 70461

JOB No:	2461	DATE:	10-18-2022
DRAWN BY:	TNT	CHECKED BY:	JMS

SHEET TITLE:
MECHANICAL PLAN

DRAWING NUMBER:
M101

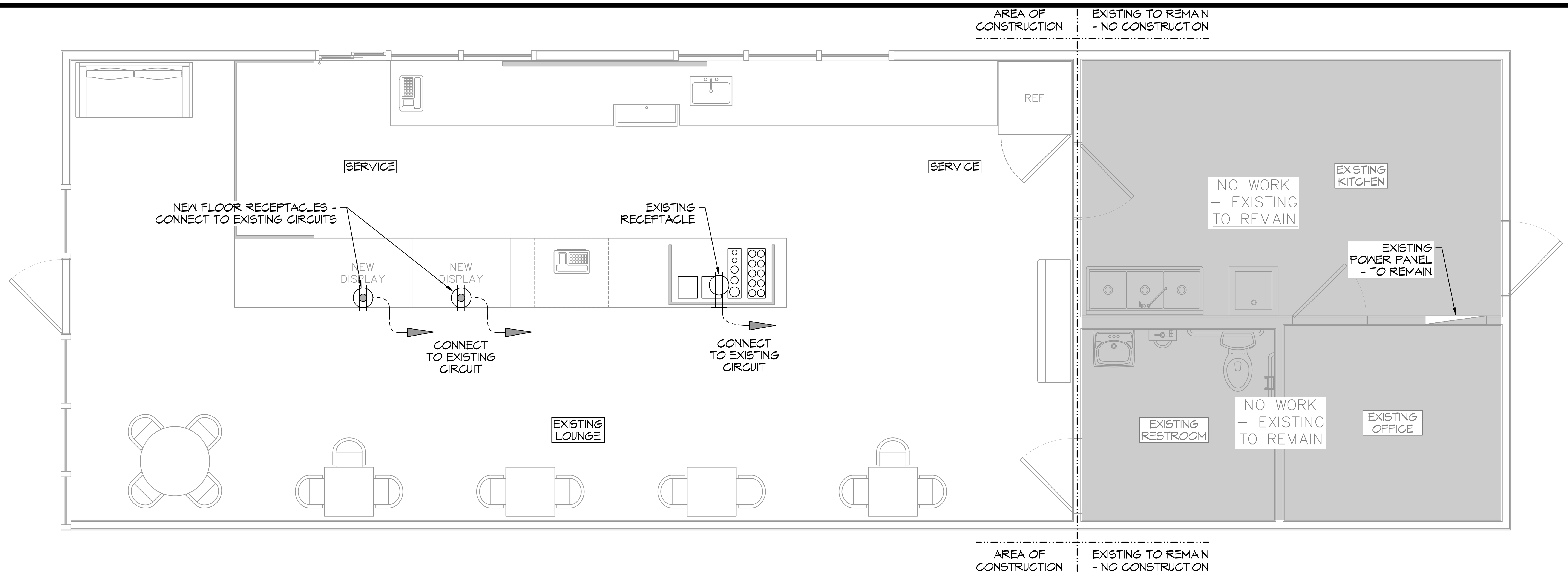

12 POWER PLAN

SCALE: 3/8"=1'-0"

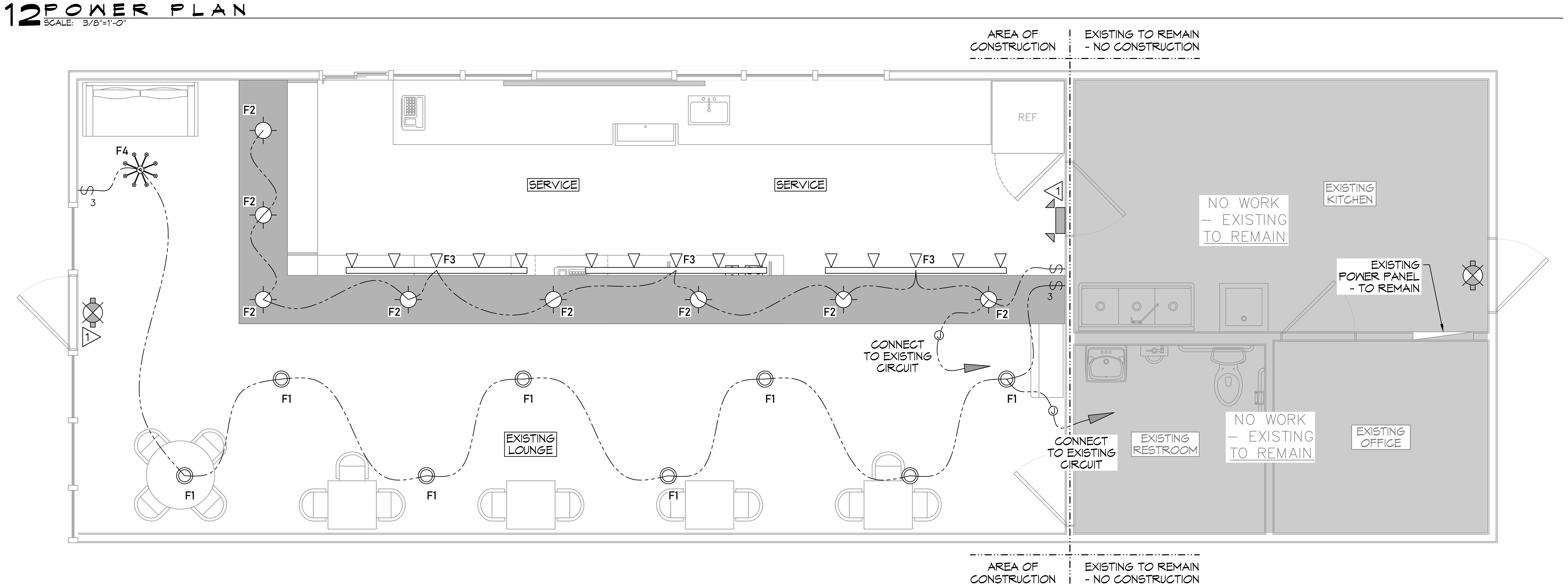

13 LIGHTING PLAN

SCALE: 3/8"=1'-0"

KEYED NOTES

1. PROVIDE CONNECTION TO UN-SWITCHED HOT OF LIGHTING CIRCUIT & SHALL HAVE 90 MIN. EMERGENCY BATTERY BACKUP.

LIGHTING LEGEND

F1	NEW 6" LED RECESSED CAN LIGHT
F2	NEW DECORATIVE PENDANT LIGHT
F3	NEW TRACK LIGHT
F4	EXISTING DECORATIVE LIGHT - TO REMAIN
	EXISTING EXIT LIGHT - TO REMAIN
	EXISTING EMERGENCY LIGHT - TO REMAIN

GENERAL LIGHTING NOTES

1. ALL WORK SHALL COMPLY WITH APPLICABLE NATIONAL, STATE, & LOCAL CODES, RULES, REGULATIONS, & REQUIREMENTS OF THE SERVICE UTILITY COMPANY.
2. GENERAL CONTRACTOR SHALL NOTIFY THE ARCHITECT IMMEDIATELY IF ANY CONFLICTS OCCUR BETWEEN LIGHTING & ANY OTHER TRADE. DO NOT PROCEED WITH INSTALLATION IN THAT AREA UNTIL CONFLICT HAS BEEN RESOLVED TO THE SATISFACTION OF THE ARCHITECT & ENGINEER.
3. REFER TO ARCHITECTURAL DRAWINGS FOR EXACT LOCATION & MOUNTING INSTRUCTIONS FOR ALL LIGHT FIXTURES. NOTIFY THE ARCHITECT & ENGINEER OF ANY DISCREPANCIES BETWEEN THESE PLANS & THE ARCHITECTURAL PLANS RELATING TO QUANTITY, TYPE & LOCATION OF DEVICES &/OR FIXTURES.
4. WHEN SPECIFIC LIGHT FIXTURE HAS BEEN SPECIFIED IN THE FIXTURE SCHEDULE, ELECTRICAL CONTRACTOR SHALL PROVIDE COMPLETE ASSEMBLY INCLUSIVE ALL PARTS & HARDWARE TO INSURE PROPER FUNCTIONING FIXTURE.
5. ALL CONDUCTORS SHALL BE A MIN OF #12 AWG UNLESS NOTED OTHERWISE.
6. ALL 120V RUNS LONGER THAN 60 FEET SHALL BE #10 AWG & 277V RUNS LONGER THAN 150 FEET SHALL BE #10 AWG UNLESS NOTED OTHERWISE.
7. ALL CONDUCTORS SHALL BE COPPER.
8. WHERE CONDUCTOR SIZES ARE NOTED ON DRAWINGS, THAT WIRE SIZE SHALL BE THROUGH THE ENTIRE RUN UNLESS OTHERWISE NOTED.
9. MOUNTED LIGHT SWITCHES 48" AFF UNLESS NOTED OTHERWISE ON ARCHITECTURAL DRAWINGS.
10. WHERE MORE THAN ONE SWITCH OCCURS IN THE SAME LOCATION, THEY SHALL BE INSTALLED IN A GANG TYPE BOX UNDER ONE COVER PLATE. ALL GANGED SWITCHES SHALL HAVE A COMMON SEAMLESS FACEPLATE. EACH MULTI-GANGED BOX SHALL BE NO MORE THAN SIX (6) SWITCHES WIDE. WHERE MORE THAN SIX (6) SWITCHES ARE SHOWN AT ONE (1) LOCATION, ADDITIONAL MULTI-GANGED BOXES SHALL BE STACKED VERTICALLY & THE WIDTH OF THE MULTI-GANGS SHALL BE AS EVEN AS POSSIBLE.
11. EACH DIMMER SWITCH SHALL HAVE A WATTAGE RATING 25% HIGHER THAN THE TOTAL WATTAGE OF AL LIGHTS TO BE CONTROLLED BY THE DIMMER. DIMMER SIZES 600, 1000, 1500, & 2000 WATTS, LUTRON NOVA T-STAR. WHERE SWITCHES ARE GANGED WITH DIMMERS, THE SWITCHES SHALL ALSO BE LUTRON NOVA T-STAR. FLUORESCENT & LOW VOLTAGE DIMMERS SHALL BE LUTRON NOVA T-STAR.
12. ALL EMERGENCY EXIT LIGHT FIXTURES SHALL HAVE 90 MINUTE BATTERY BACKUP WITH INTEGRAL TEST BUTTON & SHALL BURN CONTINUOUSLY.
13. ALL FLUORESCENT FIXTURES THAT UTILIZE DOUBLE-ENDED LAMPS & CONTAIN BALLASTS SHALL BE PROVIDED WITH A DISCONNECTING MEANS IN ACCORDANCE WITH NEC 410.73G.

GENERAL POWER NOTES

1. ALL WORK SHALL CONFORM TO THE LATEST EDITION OF THE NATIONAL ELECTRICAL CODE, THE GOVERNING ELECTRICAL CODE & ALL OTHER INSPECTION DEPARTMENTS HAVING JURISDICTION. OBTAIN CERTIFICATES OR APPROVAL WHERE REQUIRED. ELECTRICAL CONTRACTOR SHALL VERIFY ALL WIRE & CONDUIT SIZES FOR MECHANICAL EQUIPMENT TO BE INSTALLED.
2. ALL MATERIALS FURNISHED SHALL BE NEW & SHALL BE U.L. LISTED.
3. THE DRAWINGS INDICATE SIZE & GENERAL LOCATION OF WORK. SCALE DIMENSIONS SHALL NOT BE USED. THE EXACT LOCATION OF ALL LIGHTING FIXTURES, RECEPTACLES & TELEPHONE OUTLETS, ETC. SHALL BE DETERMINED BY ACTUAL CONDITIONS IN THE FIELD.
4. PRIOR TO BIDDING, CONTRACTOR SHALL VISIT THE JOB SITE & FAMILIARIZE THEMSELVES WITH THE EXISTING CONDITIONS.
5. ELECTRICAL CONTRACTOR SHALL COORDINATE HIS WORK WITH OTHER TRADES & WITH OTHER CONTRACTORS WHOSE WORK MAY AFFECT THIS INSTALLATION.
6. ELECTRICAL CONTRACTOR SHALL COORDINATE INCOMING ELECTRICAL SERVICE WITH UTILITY COMPANY & INCLUDE IN HIS BID ALL CHARGES & FEES INCURRED IN MODIFICATIONS.
7. ELECTRICAL CONTRACTOR SHALL COORDINATE THE TELEPHONE INSTALLATION WITH THE TELEPHONE COMPANY & THE GENERAL CONTRACTOR.
8. ELECTRICAL CONTRACTOR, BEFORE INSTALLING ANY OF THE WORK, SHALL SEE THAT IT DOES NOT INTERFERE WITH CLEARANCES REQUIRED FOR FINISHED COLUMNS, HUNG CEILINGS, PLASTER, PARTITIONS, WALLS, ETC. AS SHOWN IN THE ARCHITECTURAL DRAWINGS & DETAILS. IF ANY WORK IS INSTALLED & IT LATER DEVELOPS THAT SUCH DETAILS OR DESIGN CANNOT BE FOLLOWED, THE CONTRACTOR, AT HIS OWN EXPENSE, SHALL MAKE SUCH CHANGES IN THE WORK AS DIRECTED BY THE ARCHITECT, AS WELL AS TO PERMIT THE INSTALLATION OF THE ARCHITECTURAL WORK AS SHOWN ON THE PLANS & DETAILS.
9. PERFORM TEST REQUIRED BY THE OWNER OR THE ENGINEER IN CONNECTION WITH THE OPERATION OF THE ELECTRICAL SYSTEM IN THE BUILDING. ALL TESTS SHALL BE MADE IN ACCORDANCE WITH THE LATEST STANDARD OF THE IEEE & THE NATIONAL ELECTRICAL CODE.
10. MIN CONDUCTOR SIZE SHALL BE #12, 600V INSULATION. MIN SIZE CONDUIT SHALL BE 3/4" ELECTRICAL METALLIC TUBING (EMT) FOR INTERIOR USE, 3/4" SCHEDULE 80 PVC FOR EXTERIOR USE ABOVE GRADE & 1" SCHEDULE 40 PVC FOR EXTERIOR USE BELOW GRADE, BURIED A MIN OF 18" FOR NON-VEHICULAR TRAFFIC AREAS & 36" IN VEHICULAR TRAFFIC AREAS. EMT SHALL BE USED WITH METAL STUD CONSTRUCTION & ALL ASSEMBLY OCCUPANCIES. USE NMC IN WOOD CONSTRUCTION. 6' LENGTH MC CABLE IS ALLOWED ABOVE DROPPED CEILING. INTERIOR FITTINGS SHALL BE CAST WHERE EXPOSED ON WALLS, & EXTERIOR FITTINGS SHALL BE CAST BOXES WITH NEMA 3R COVER(S).
11. CONTRACTOR SHALL INSTALL WIRING, CIRCUIT BREAKERS & OTHER CIRCUIT COMPONENTS TO MATCH EQUIPMENT ACTUALLY INSTALLED.
12. ALL 120V RUNS LONGER THAN 60' SHALL BE #10 AWG & 277V RUNS LONGER THAN 150' SHALL BE #10 AWG UNLESS NOTED OTHERWISE.
13. INSTALL GROUND FAULT RECEPTACLES AT RECEPTACLE LOCATIONS WITHIN 5' OF SINKS OR LAVATORIES, & AT EXTERIOR LOCATIONS. EXTERIOR RECEPTACLES SHALL ALSO BE WATERPROOF. ALL RECEPTACLES IN THE KITCHEN AREA SHALL HAVE GROUND FAULT PROTECTION.
14. BONDING & GROUNDING SHALL BE IN ACCORDANCE WITH NFPA 70:230-63, NFPR 250-23, 250-71 & 250-72.
15. GROUND NEUTRAL IN ACCORDANCE WITH NFPA 70:250-23b.
16. FUSES SHALL BE ITT CLASS K5, 250 VOLT, 200,000 AMP INTERRUPTING CAP.
17. PROVIDE SERVICES OF A FIRE/SMOKE DETECTION & ALARM COMPANY TO DESIGN & INSTALL ALARM SYSTEM TO MEET REQUIREMENTS OF THE STATE FIRE MARSHALL & THE FIRE DISTRICT.
18. EXTERIOR LIGHTING SHALL BE SHADED OR INWARDLY DIRECTED IN SUCH A MANNER SO THAT NO DIRECT LIGHTING OR GLARE IS CAST BEYOND THE PROPERTY LINE. THE INTENSITY OF SUCH LIGHTING SHALL NOT EXCEED ONE FOOT CANDLE AS MEASURED AT THE ABUTTING PROPERTY LINE.
19. ALL ELECTRICAL, MECHANICAL & PLUMBING PENETRATING FIRE PARTITIONS SHALL BE FIRE CAULKED. (PENETRATIONS THROUGH RATED CONSTRUCTION SHALL BE SEALED WITH A MATERIAL CAPABLE OF PREVENTING THE PASSAGE OF FLAMES & HOT GASES WHEN TESTED IN ACCORDANCE WITH ASTM-E814.)
20. VERIFY ELECTRICAL CONNECTIONS PER MANUFACTURER'S RECOMMENDATIONS.
21. ALL BRANCH CIRCUITS SERVING PATIENT CARE AREAS SHALL PROVIDE AN EFFECTIVE GROUND-FAULT CURRENT PATH BY INSTALLATION IN A METAL RACEWAY SYSTEM OR A MEDICAL GRADE MC CABLE (NEC ART. 517.13(A & B)).

DAMMON ENGINEERING, INC.
LOUISIANA & MISSISSIPPI
Chief Engineer: Brian Mistich, PE
554 Old Spanish Trail
Slidell, LA 70458
www.dammonengineering.com
info@dammonengineering.com
PH: 985.649.5832

REVISIONS		
#	DESCRIPTION	DATE

SEAL:

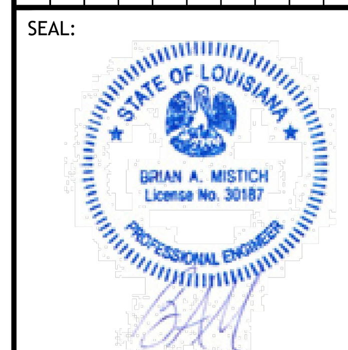

The above drawings and specifications, designs and arrangements represented thereby are and shall remain the property of Dammon Engineering, and no part thereof shall be copied, disclosed to others, or used in connection with any work or project other than the specific project for which the have been prepared and developed without the written consent of Dammon Engineering. Visual contact with these drawings or specifications shall constitute conclusive evidence of acceptance of these restrictions.

DENTAL OFFICE

PJ'S COFFEE

2040 GAUSE BLVD,
SLIDELL, LA 70461

JOB No:	2461	DATE:	10-18-2022
DRAWN BY:	TNT	CHECKED BY:	CKD

SHEET TITLE:
POWER AND LIGHTING PLAN

DRAWING NUMBER:
E101

SHEET No: 8 of 8