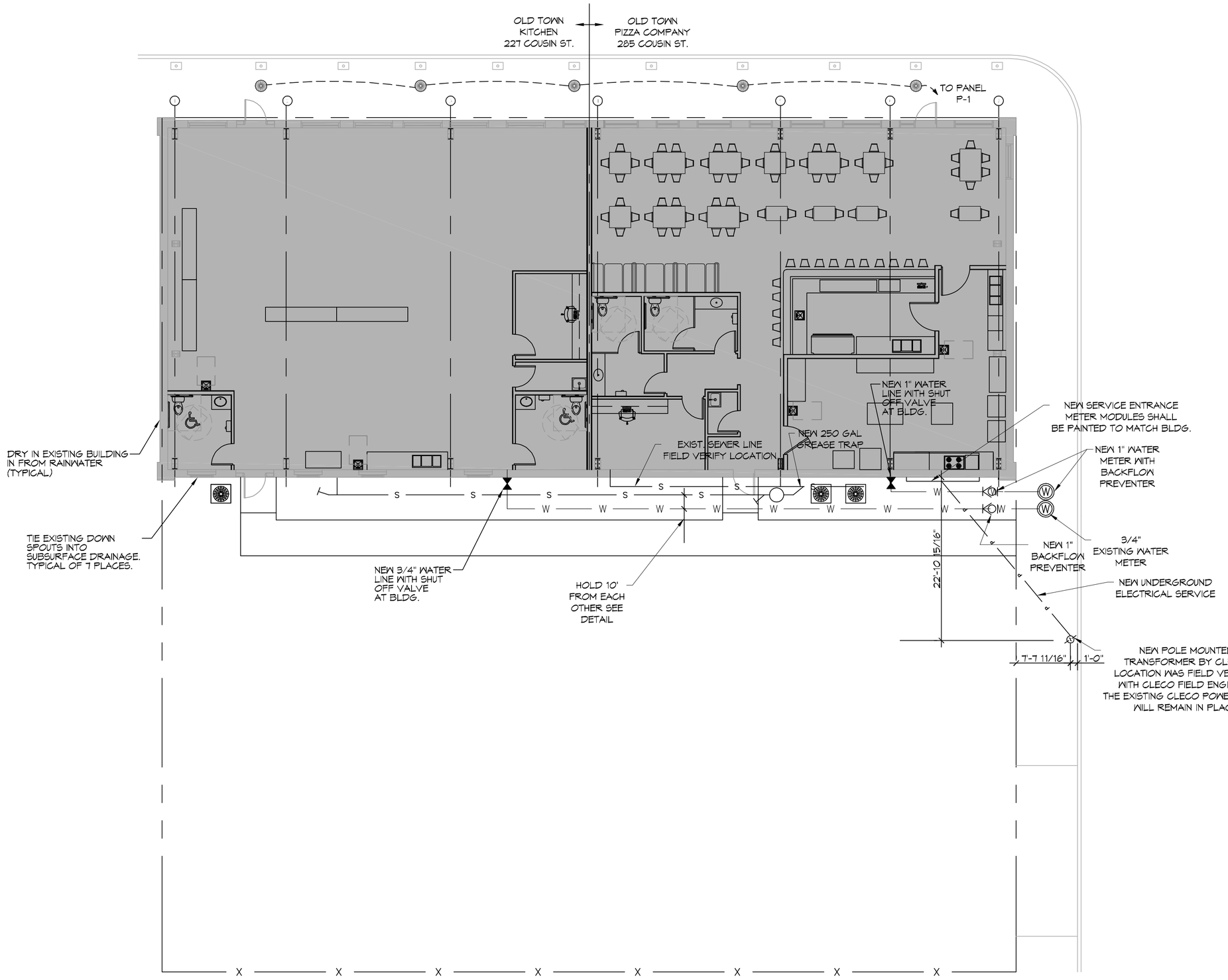

N

1 SITE UTILITY PLAN
SCALE: 1"=10'-0"

GENERAL SITE NOTES

1. PROVIDE ALL LABOR, MATERIAL AND EQUIPMENT FOR A COMPLETE OPERATING SYSTEM. CONTRACTOR IS TO FIELD VERIFY ALL EXISTING UTILITY LOCATIONS, ELEVATIONS, AND INVERTS PRIOR TO COMMENCING ANY WORK. CONTRACTOR SHALL PAY NECESSARY FEES FOR THE UTILITIES CONNECTIONS.
2. CONTRACTOR TO BE RESPONSIBLE TO VERIFY ANY INVERTS AND SET NEW INVERTS OF SEWAGE AND DRAINAGE PIPES.
3. ALL WORK AND MATERIAL TO COMPLY STRICTLY TO THE LATEST LOCAL CITY PARISH, STATE, AND NATIONAL GOVERNING CODES.
4. SEWAGE LINES 3" AND SMALLER SHALL BE SLOPED 1/4" PER FOOT AND LINES THAT ARE 4" AND LARGER SHALL BE SLOPED 1/8" PER FOOT.
10. CONTRACTOR SHALL CONTACT LOUISIANA ONE CALL PRIOR TO COMMENCEMENT OF SITE EXCAVATION.

SITE UTILITIES LEGEND

- W — NEW WATER LINE
- S — NEW SEWER LINE
- P — NEW ELECTRICAL LINE

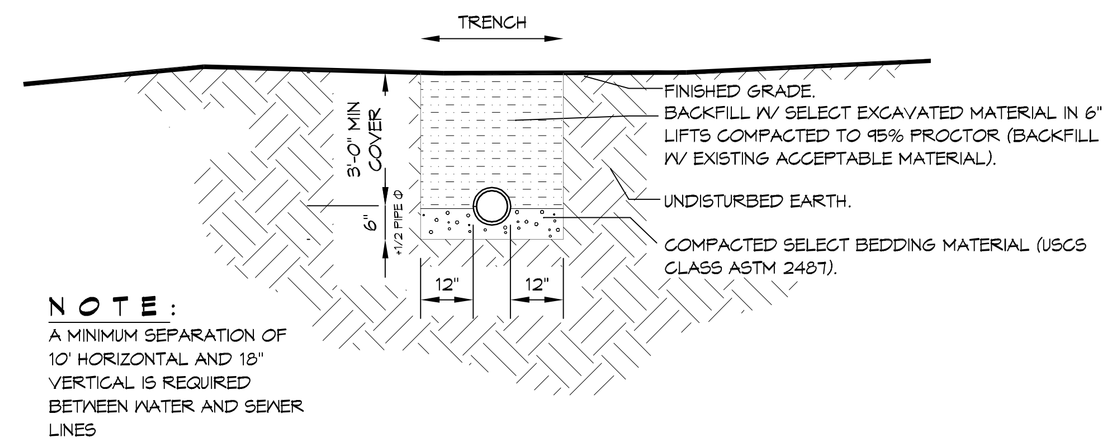

NOTE:
A MINIMUM SEPARATION OF 10' HORIZONTAL AND 18" VERTICAL IS REQUIRED BETWEEN WATER AND SEWER LINES

2 DETAIL
SCALE: N.T.S. — SEWER AND WATER SEPERATION

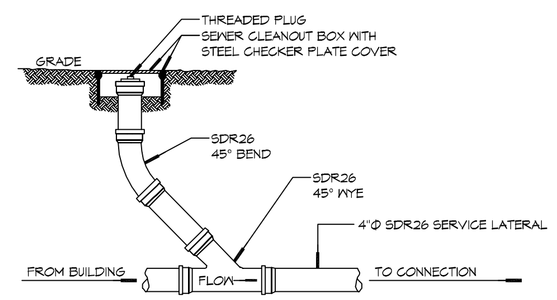

3 DETAIL
SCALE: N.T.S. — SEWER CLEAN OUT

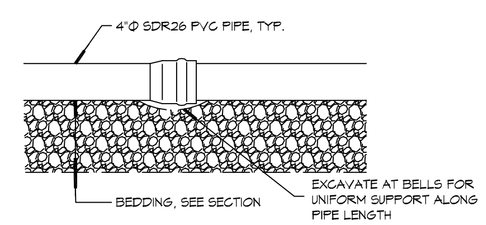

4 DETAIL
SCALE: N.T.S. — TYPICAL PIPE BEDDING

DAMMON ENGINEERING, INC.
LOUISIANA & MISSISSIPPI
www.dammonengineering.com
info@dammonengineering.com
PH: 985.649.5832
Chief Engineer: Brian Mistich, PE
554 Old Spanish Trail
Slidell, LA 70458

#	DESCRIPTION	DATE

REVISIONS

SEAL:

NEW RESTAURANT
OLD TOWN PIZZA COMPANY
285 COUSIN STREET
SLIDELL, LA. 70458

JOB No:	23931	DATE:	11-21-17
DRAWN BY:	CKD	CHECKED BY:	CKD

This drawing is the property of Dammon Engineering, and any part thereof shall not be used, copied or reproduced without the written consent of Dammon Engineering. Any alterations made to this drawing by other than Dammon Engineering, must bear a note stating the alteration and signed and dated by the person making the alteration and a copy of the alteration submitted to Dammon Engineering.

SHEET TITLE:
SITE UTILITY PLAN

DRAWING NUMBER:
C102

SHEET No: 4 of # 9

FILE NAME: J:\- RESTAURANT\23931 - Old Town Pizza Company\Drawings\Current Drawings\C102 - Site Utilities.dwg PLOT DATE & TIME: Wednesday, December 20, 2017 8:37:18 AM