HOOD INFORMATION

HOOD NO.	MODEL	LENGTH	MAX. COOKING TEMP.	EXHAUST PLENUM SIDE(S) TOTAL EXH. CFM	WIDTH	LENG.	SIA.	CFM	S.P.	SUPPLY PLENUM SIDE(S) TOTAL SUP. CFM	WIDTH	LENG.	SIA.	CFM	S.P.	HOOD CONSTRUCTION	HOOD CONFIG. END TO END	HOOD CONFIG. RDV
1	7224 R	10' 0.00"	450 Deg.	3000	10"	28"		3000	-0.645"	1650	8.000	24.000		825	-0.064	430 SS Where Exposed	ALONE	ALONE
											8.000	24.000		825	-0.064			

HOOD INFORMATION

HOOD NO.	FILTER(S) TYPE	QTY.	HEIGHT	LENGTH	LIGHT(S) QTY.	TYPE	VAPOR GUARD	LOCATION	UTILITY CABINET(S) FIRE SYSTEM TYPE	SIZE	ELECTRICAL MODEL #	QUANTITY	SWITCHES LOCATION	FIRE SYSTEM PIPING	HOOD WEIGHT
1	Alum Baffle w/ Handles	6	16"	20"	3	Incandescent Light Fixt	NO	Left	Ansul R102	3.0	111115F9	1 Light 1 Fan	Outside	YES	583 LBS

HOOD OPTIONS

HOOD NO.	OPTION
1	FINISHED BACK 120.00" Long

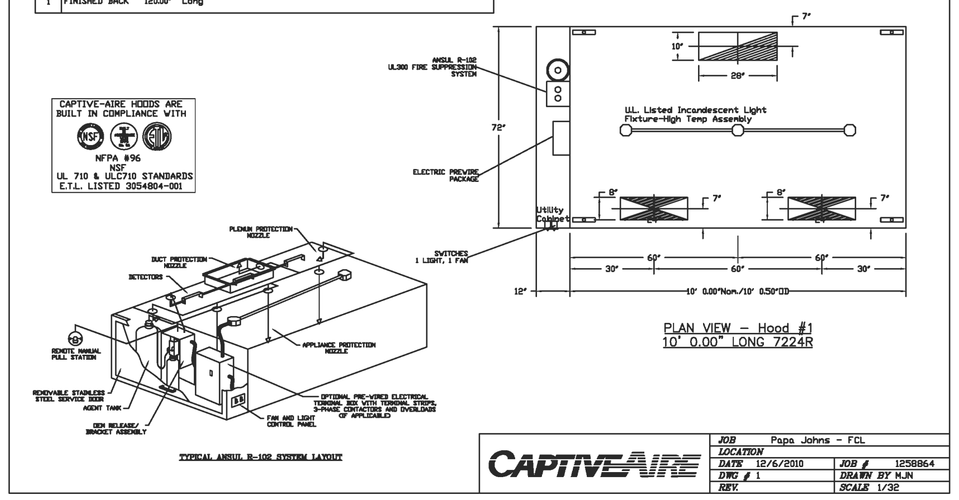

JOB	Papa Johns - FCL
LOCATION	
DATE 12/6/2010	JOB # 1258864
DWG # 1	DRAWN BY MJN
REV.	SCALE 1/32

EXHAUST FAN INFORMATION

FAN LIST NO.	FAN LIST MODEL #	MODEL	TAG	CFM	S.P.	RPM	H.P.	#	VOLT	FLA	WEIGHT G.BLS
1	NBCF7-A-XL-G10-MCA165FA	NCA165FA		3000	0.750	1009	1.000	1	115	14.0	484.54

HEATER/MUA FAN INFORMATION

FAN LIST NO.	FAN LIST MODEL #	BLOWER	HOUSING	TAG	CFM	S.P.	RPM	H.P.	#	VOLT	FLA	WEIGHT G.BLS
1	NBCF7-A-XL-G10-MCA165FA	G10	ALA		1625	0.500	737	0.500	1	115	8.0	484.54

FAN OPTIONS

FAN LIST NO.	OPTION Qty. - Description
1	1 - Grease Box

CURB ASSEMBLIES

NO.	IN FAN	ITEM	SIZE
1	# 1	Curb	21.000"W x 55.875"L x 20.000/20.000"H Vented
	# 1	Exhaust Adapter	From 16.000"wg To 25.500"wg x 9.000"H
	# 1	Roof	4.000"W x 4.000"L x 36.000"H(wing Width.

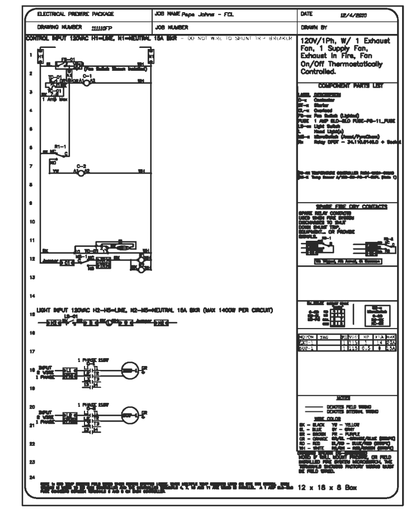

ELECTRICAL PACKAGES

NO.	TAG	PACKAGE #	LOCATION	SWITCHES LOCATION	SWITCHES QUANTITY	ROOFTOP STARTERS	OPTION	FANS CONTROLLED TYPE	#	HP.	VOLTS	FLA
1		111115F7	Utility Cabinet Left	Utility Cabinet Left	1 Light		Exhaust On In Fire, Fans On/Off Thermostatically Controlled	Exhaust	1	1.000	115	14.0
				Hood # 1	1 Fan			Supply	1	0.500	115	8.0

JOB	Papa Johns - FCL
LOCATION	
DATE 12/6/2010	JOB # 1258864
DWG # 3	DRAWN BY MJN
REV.	SCALE 1/32

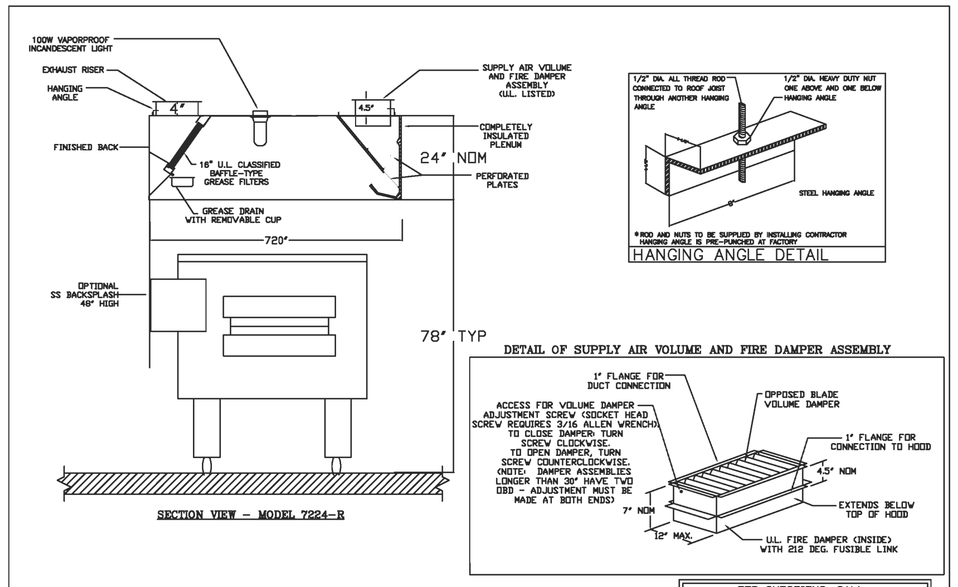

FOR QUESTIONS, CALL:
CAPTIVE-AIRE COASTAL NC/SC OFFICE
MIKE NOVAK / CARLOS SNYDER
WILMINGTON, NC / COLUMBIA, SC
PHONE: (877) 256-7644 FAX: (919) 747-5614

JOB	Papa Johns - FCL
LOCATION	
DATE 12/6/2010	JOB # 1258864
DWG # 2	DRAWN BY MJN
REV.	SCALE 1/32

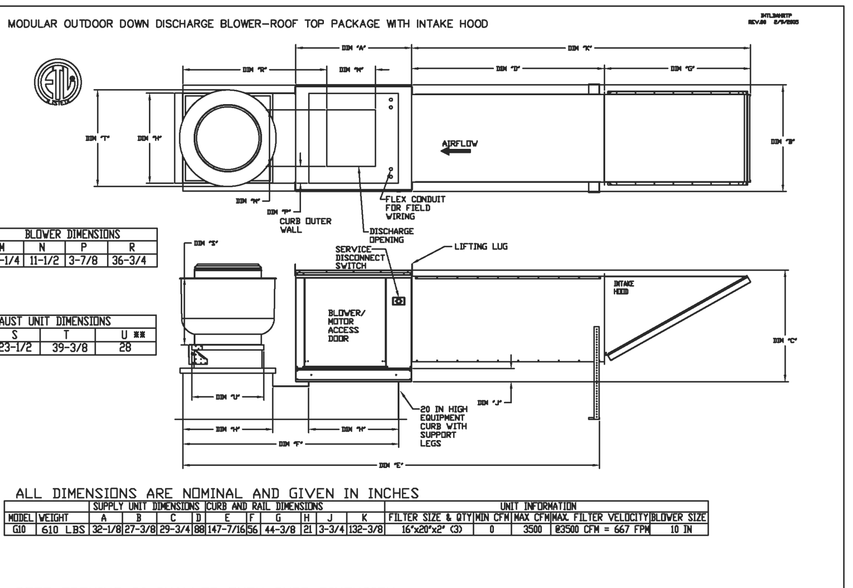

	BLOWER DIMENSIONS			
UNIT SIZE	M	N	P	R
10"	13-1/4	11-1/2	3-7/8	36-3/4

EXHAUST UNIT DIMENSIONS			
MODEL #	S	T	U
NCA165FA	23-1/2	39-3/8	28

ALL DIMENSIONS ARE NOMINAL AND GIVEN IN INCHES

		SUPPLY UNIT DIMENSIONS																UNIT INFORMATION			
MODEL	WEIGHT	A	B	C	D	E	F	G	H	I	J	K	FILTER SIZE & QTY	MIN CFM	MAX CFM	MAX. FILTER VELOCITY	BLOWER SIZE
G10	610 LBS	32-1/8	27-3/8	29-3/4	88	147-7/8	56	44-3/8	21	13-3/4	132-3/8		16"x20"x2" CD	8	3500	12500 CFM = 667 FPM	10 IN

ROOF OPENING 2" SMALLER THEN CURB DIMENSION

JOB	Papa Johns - FCL
LOCATION	
DATE 12/6/2010	JOB # 1258864
DWG # 4	DRAWN BY MJN
REV.	SCALE 1/32

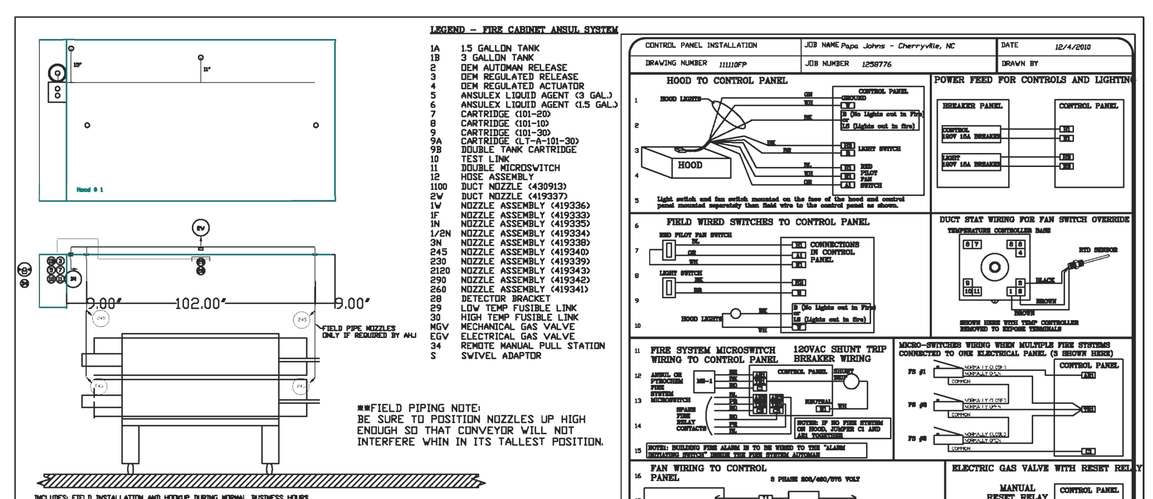

INSTALLED INSTALLATION MUST BE PERFORMED DURING NORMAL HOURS BY CERTIFIED INSTALLERS ONLY IN THE LOCATION NOTED ABOVE. TWO SITE VISITS MUST BE MADE BY THE INSTALLATION & SERVICE COMPANY. ONE VISIT FOR THE INSTALLATION OF THE SYSTEM & ANY OTHER NECESSARY CHANGES, ONE MECHANICAL GAS VALVE PER SYSTEM AT A MAXIMUM SIZE OF 2 INCHES UNDER FLAMES.
FACTORY PIPING EXTENDS A MAXIMUM OF 6" ABOVE THE TOP OF THE HOOD. ANY ADDITIONAL PIPING, FITTINGS, VALVE, GAUGE & NOZZLES WILL BE ADDED IF APPLICABLE. GAS VALVE INSTALLATION, ELECTRICAL HOOKUP AND CONNECTIONS, HANGING OF PRE-CONNECTED SHUNT TRIP, MANUAL PULL STATION, EXTINGUISHERS, ON-SITE RE-PIPING DUE TO EQUIPMENT LAYOUT CHANGES.

NOTES
- FIELD PIPE DROPS AS SHOWN
  SLEEVING ELBOWS TEES, AND NOZZLES SUPPLIED BY CAS
- RELOCATE NOZZLES IF FLOW PATTERN IS BLOCKED BY SHELVING, SALAMANDERS, ETC
- MAXIMUM 12 FEET DROPS IN SUPPLY LINE
- MAXIMUM 20 FEET OF PIPE FROM TANK TO FIRST NOZZLE.
- IF APPLICABLE, PRE-PIPED CHAMBERLIER DROPS ARE SHIPPED LOOSE.
- FACTORY PIPING EXTENDS A MAXIMUM OF 6" ABOVE THE TOP OF THE HOOD.
- APPLIANCE DIMENSIONS LISTED REPRESENT THE COOKING SURFACE SIZE, NOT THE OVERALL APPLIANCE SIZE.
- THIS FIRE SYSTEM COMPLIES WITH UL 300 REQUIREMENTS

SPECIFICATIONS
THE RESTAURANT FIRE SUPPRESSION SYSTEM SHALL BE THE PRE-ENGINEERED AUTOMATIC WET CHEMICAL AGENT DISTRIBUTION NETWORK. IT SHALL BE LISTED WITH UNDERWRITERS LABORATORIES, INC. (UL).

THE SYSTEM SHALL BE CAPABLE OF AUTOMATIC DETECTION AND ACTUATION WITH LOCAL OR REMOTE MANUAL ACTUATION. ACCESSORIES SHALL BE AVAILABLE FOR MECHANICAL OR ELECTRICAL GAS LINE SHUT-OFF APPLICATIONS.

THE EXTINGUISHING AGENT SHALL BE A POTASSIUM CARBONATE, POTASSIUM ACETATE-BASED FORMULATION DESIGNED FOR FLAME KNOCKDOWN AND SECONDARY HEAT SUPPRESSION. THE AGENT SHALL BE STORED IN STAINLESS STEEL CONTAINERS WITH INSTRUCTIONS FOR LIQUID AGENT HANDLING AND USAGE.

THE REGULATED RELEASE MECHANISM SHALL BE COMPATIBLE WITH A FUSIBLE LINK DETECTION SYSTEM. THE FUSIBLE LINK SHALL BE SELECTED AND INSTALLED ACCORDING TO THE OPERATING TEMPERATURE IN THE VENTILATING HOOD. THE FUSIBLE LINK SHALL BE SUPPORTED BY A DETECTOR BRACKET/ LINKAGE ASSEMBLY.

Fire System Information

FIRE SYSTEM NO.	TYPE	SIZE	FLOW POINTS	INSTALLATION SYSTEM	INSTALLATION LOCATION ON HOOD
1	Ansul R102	3.0	3	Fire Cabinet Left	Left

GAS VALVE(S)

FIRE SYSTEM NO.	TYPE	SIZE	SUPPLIED BY
1	Mechanical	2.000	Distributor

Drawn By:
System Size: ANSUL-30 Total FP required 3 ON 11
Hood # 1 10' 0.00" Long x 70" Wide x 64" high.
Room # 1 Size 30' x 30'

JOB	Papa Johns
LOCATION	FC-Left
DATE 12/6/2010	JOB # 1258864
DWG # 5	DRAWN BY MJN
REV.	SCALE 1/48

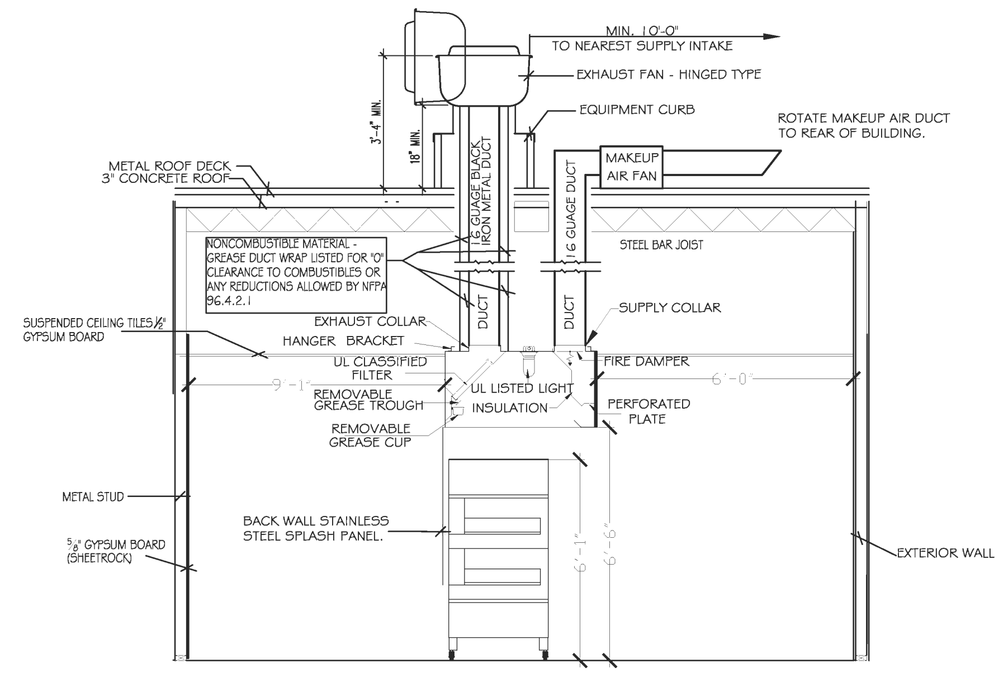

TYPICAL PIZZA HOOD & DUCT INSTALLATION W/CLEARANCE REDUCTION MATERIALS TO PROTECT COMBUSTIBLES

N.T.S

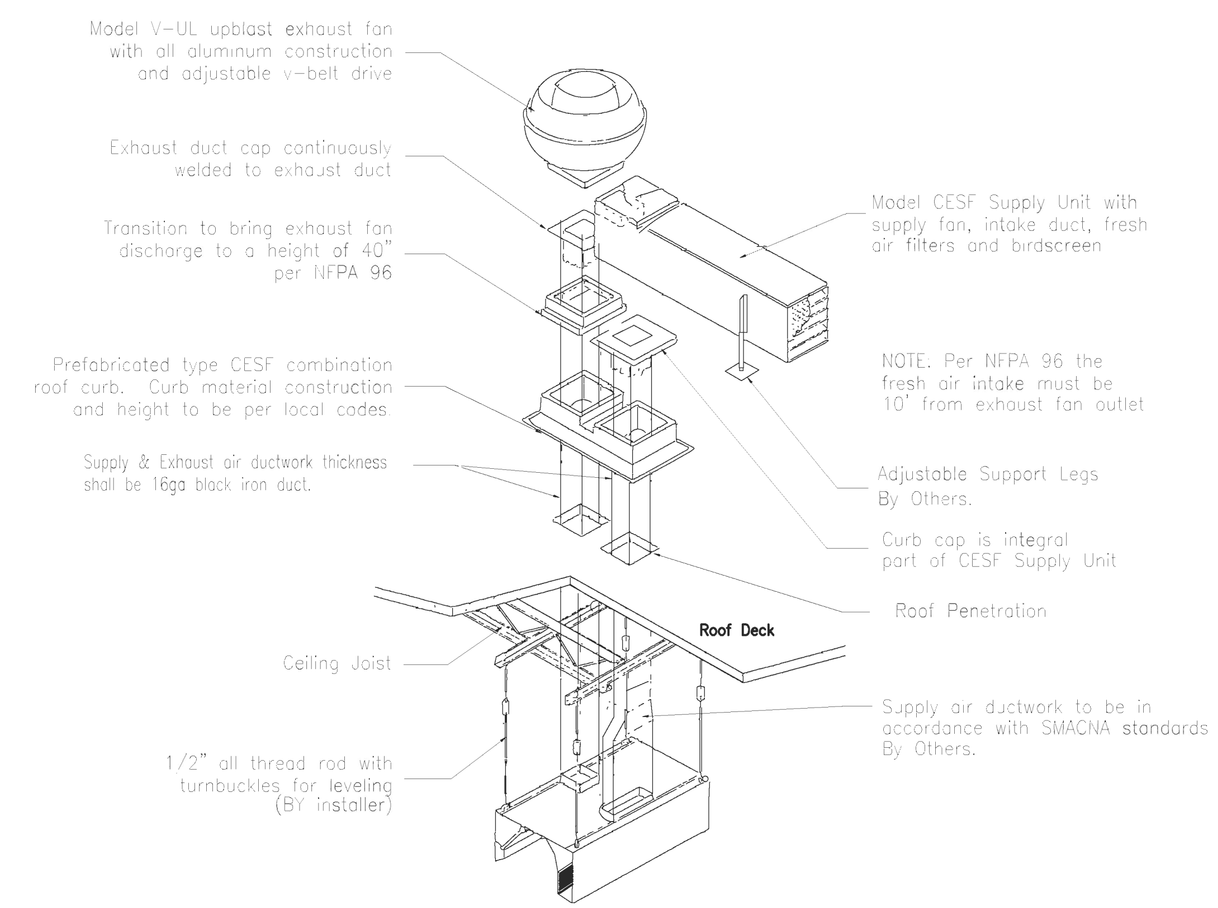

TYPICAL INSTALLATION

ACW WALL HOOD & CESF ROOF TOP PACKAGE

DAMMON ENGINEERING, INC.

CHIEF ENGINEER
EMMETT DAMMON, P.E.

CHIEF ARCHITECT
ROBERT WILTSE

554 OLD SPANISH TRAIL
SLIDELL, LA. 70458
OFFICE: 985-649-5832
FAX: 985-641-5950

WEBSITE:
WWW.DAMMONENGINEERING.COM

EMAIL:
DAMMONENG@BELLSOUTH.NET

ARCHITECTURE

ENGINEERING

STUDIES

PLANNING

INVESTIGATION

EXPERT WITNESS

PAPA JOHN'S PIZZA TENANT BUILDOUT

3013 PONTCHARTRAIN DR.
SLIDELL
LOUISIANA
70458

HOOD DETAILS

REV:

SCALE: AS NOTED

JOB#: 2119

DATE: 8/12/2011

SHEET 6

M-2

OF 10