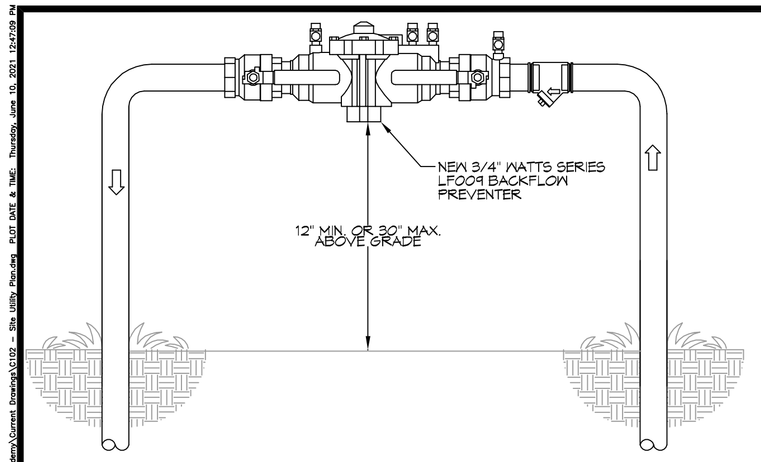

9 TYPICAL RISER DETAIL
SCALE: N.T.S. — TYPICAL

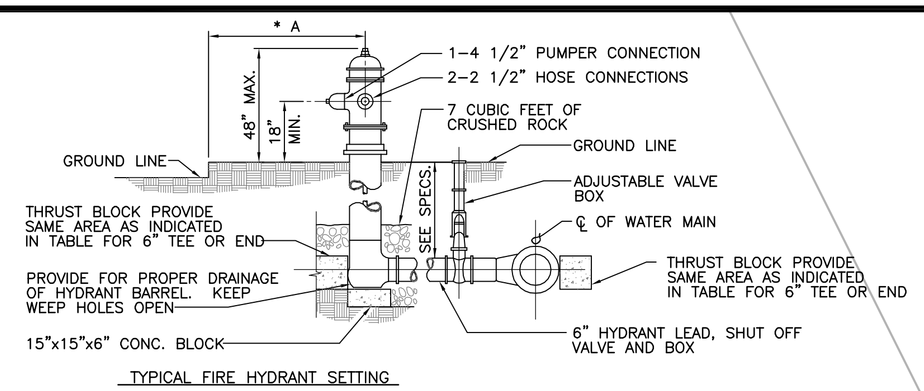

TYPICAL FIRE HYDRANT SETTING

N.T.S.

* A =7'-0" FROM BACK OF PAVEMENT WHERE NO CURB EXISTS OR 4'-0" FROM BACK OF CURB.

10 FIRE HYDRANT DETAIL
SCALE: N.T.S. — TYPICAL

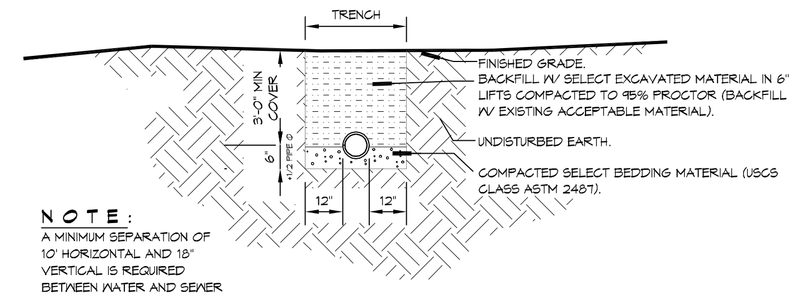

NOTE:
A MINIMUM SEPARATION OF 10' HORIZONTAL AND 18" VERTICAL IS REQUIRED BETWEEN WATER AND SEWER LINES

11 DETAIL
SCALE: N.T.S. — SEWER AND WATER SEPERATION

GENERAL SITE NOTES

1. PROVIDE ALL LABOR, MATERIAL AND EQUIPMENT FOR A COMPLETE OPERATING SYSTEM. CONTRACTOR IS TO FIELD VERIFY ALL EXISTING UTILITY LOCATIONS, ELEVATIONS, AND INVERTS PRIOR TO COMMENCING ANY WORK. CONTRACTOR SHALL PAY NECESSARY FEES FOR THE UTILITIES CONNECTIONS.
2. CONTRACTOR TO BE RESPONSIBLE TO VERIFY ANY INVERTS AND SET NEW INVERTS OF SEWAGE AND DRAINAGE PIPES.
3. ALL WORK AND MATERIAL TO COMPLY STRICTLY TO THE LATEST LOCAL CITY PARISH, STATE, AND NATIONAL GOVERNING CODES.
4. SEWAGE LINES 3" AND SMALLER SHALL BE SLOPED 1/4" PER FOOT AND LINES THAT ARE 4" AND LARGER SHALL BE SLOPED 1/8" PER FOOT.
10. CONTRACTOR SHALL CONTACT LOUISIANA ONE CALL PRIOR TO COMMENCEMENT OF SITE EXCAVATION.

SITE UTILITIES LEGEND

—— W ——	WATER LINE	CO	CLEAN OUT
—— S ——	SEWER LINE	—·—·—·—	POWER LINE

FOR TAPS

CONTACT BILLY PALMISANO WITH THE CITY OF SLIDELL PUBLIC UTILITY DEPARTMENT AT (985)646-4291 FOR TAPS."

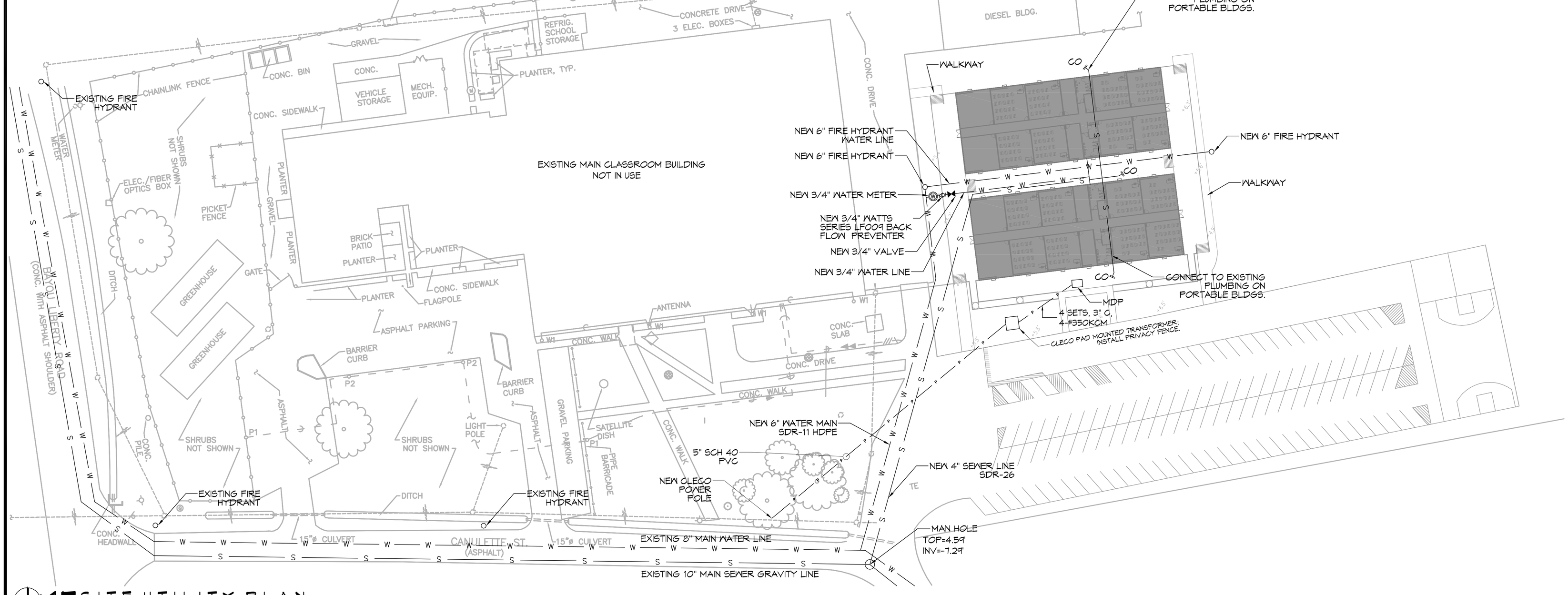

15 SITE UTILITY PLAN
SCALE: 1" = 40'

DAMMON ENGINEERING, INC.
LOUISIANA & MISSISSIPPI

www.dammonengineering.com
info@dammonengineering.com
PH: 985.649.3832 F: 985.641.5950

Chief Engineer: Brian Mistich, PE
554 Old Spanish Trail
Slidell, LA 70458

REVISIONS

#	DESCRIPTION	DATE

LAKESIDE CHRISTIAN ACADEMY
1000 CANULETTE RD.
SLIDELL, LA 70458

JOB No:	2440	DATE:	06-10-2021
DRAWN BY:	CAD	CHECKED BY:	CAD

The client owns the plans, drawings and specifications. Reproduction or reuse of the drawings or specifications or any portion thereof without the written consent of Dammon Engineering is prohibited by others, or which is in conflict with any rights or property either than the rights of the client. Dammon Engineering shall be held harmless for any reuse of the drawings or specifications by others, or which is in conflict with any rights or property either than the rights of the client.

SHEET TITLE:
SITE UITILITY PLAN

DRAWING NUMBER:
C102

SHEET No: 4 of 11