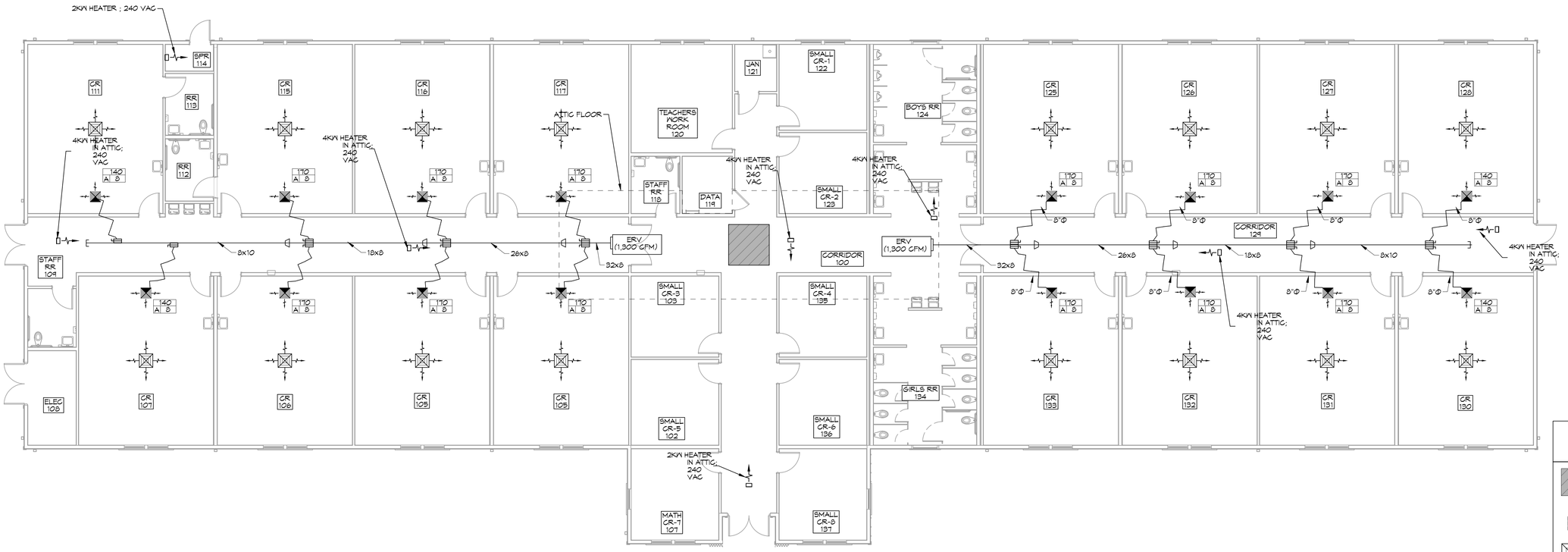

2 OUTSIDE AIR & HEATERS

SCALE: 1/8" = 1'-0"

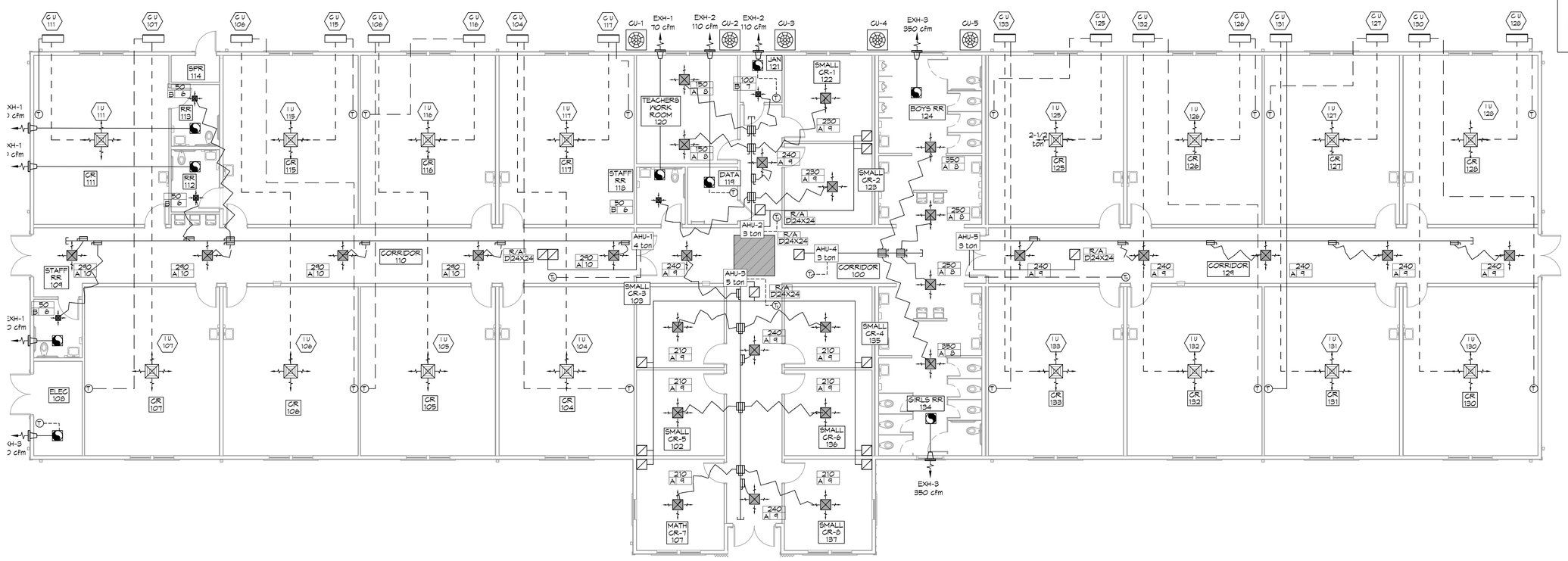

1 MECHANICAL PLAN

SCALE: 1/8" = 1'-0"

LEGEND

- SKY LIGHT
- EXHAUST FAN
- SUPPLY AIR GRILLE
- RETURN AIR GRILLE
- HEATER

DAMMON ENGINEERING, INC.
LOUISIANA & MISSISSIPPI
www.dammonengineering.com
info@dammonengineering.com
PH: 985.649.9832
Chief Engineer: Brian Mistich, PE
554 Cypress Trail
Slidell, LA 70458

#	DESCRIPTION	DATE

REVISIONS

SEAL:

NEW CLASSROOM BUILDING

LA KEY ACADEMY

PRIVETTE BLVD
COVINGTON, LA

JOB No:	2466
DATE:	11-10-2022
DRAWN BY:	TNT
CHECKED BY:	JMS

All drawings, specifications, plans, designs, and ideas contained herein are the property of Dammon Engineering, and shall not be used for other work and by any other persons except by agreement in writing. Visual contact with these documents shall constitute conclusive evidence of acceptance of these restrictions.

SHEET TITLE:
MECHANICAL PLAN AND OUTSIDE AIR & HEATERS

DRAWING NUMBER:

M101

SHEET No: