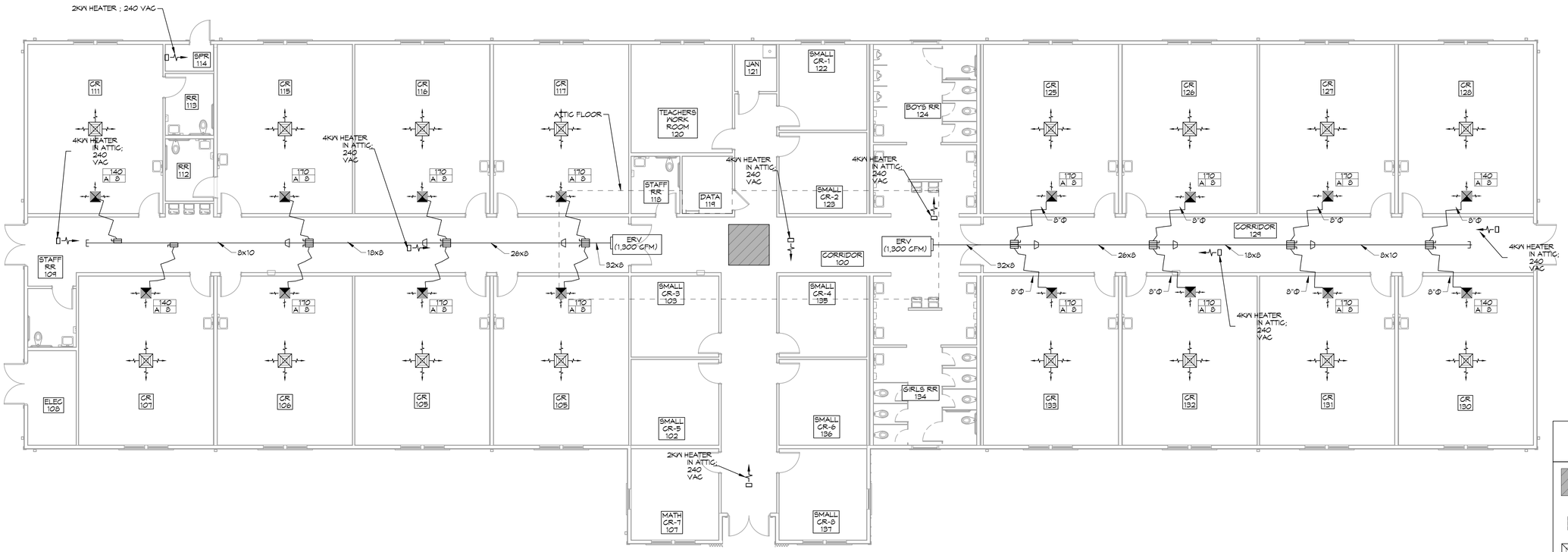

2 OUTSIDE AIR & HEATERS

SCALE: 1/8" = 1'-0"

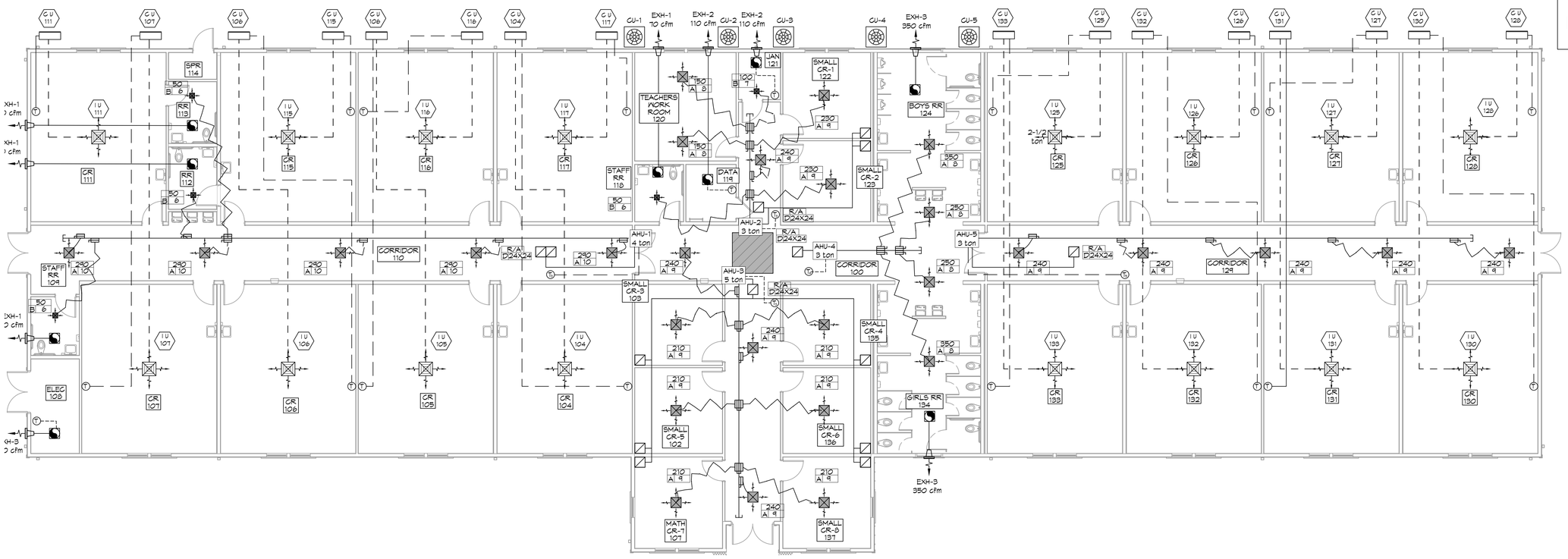

1 MECHANICAL PLAN

SCALE: 1/8" = 1'-0"

LEGEND

- SKY LIGHT
- EXHAUST FAN
- SUPPLY AIR GRILLE
- RETURN AIR GRILLE
- HEATER

DAMMON ENGINEERING, INC.
LOUISIANA & MISSISSIPPI
www.dammonengineering.com
info@dammonengineering.com
PH: 985.649.9832
Chief Engineer: Brian Mistich, PE
554 Cypress Trail
Slidell, LA 70458

REVISIONS

#	DESCRIPTION	DATE

SEAL:

NEW CLASSROOM BUILDING

LA KEY ACADEMY

PRIVETTE BLVD
COVINGTON, LA

JOB No:	2466
DATE:	11-10-2022
DRAWN BY:	TNT
CHECKED BY:	JMS

All drawings, specifications, plans, designs, and ideas contained herein are the property of Dammon Engineering, and shall not be used for other work and by any other persons except by agreement with the owner of such project. No work is to have been prepared or duplicated without written consent of Dammon Engineering. Visual contact with these documents shall constitute acceptance of the above restrictions.

SHEET TITLE:
MECHANICAL PLAN AND OUTSIDE AIR & HEATERS

DRAWING NUMBER:

M101

SHEET No:

FILE NAME: J:\- Schools Projects\2466 - La Key Academy\Drawings\Current\M101 - Mechanical Plan.dwg PLOT DATE & TIME: Thursday, November 17, 2022 2:25:45 PM