FILE NAME: J:\- Schools Public\ST TAMMANY PARISH SCHOOL BOARD\Salmen High School Press Box\Drawings\Current Drawings\A102 – Elevation and Plan view.dwg PLOT DATE & TIME: Tuesday, June 21, 2022 12:41:08 PM

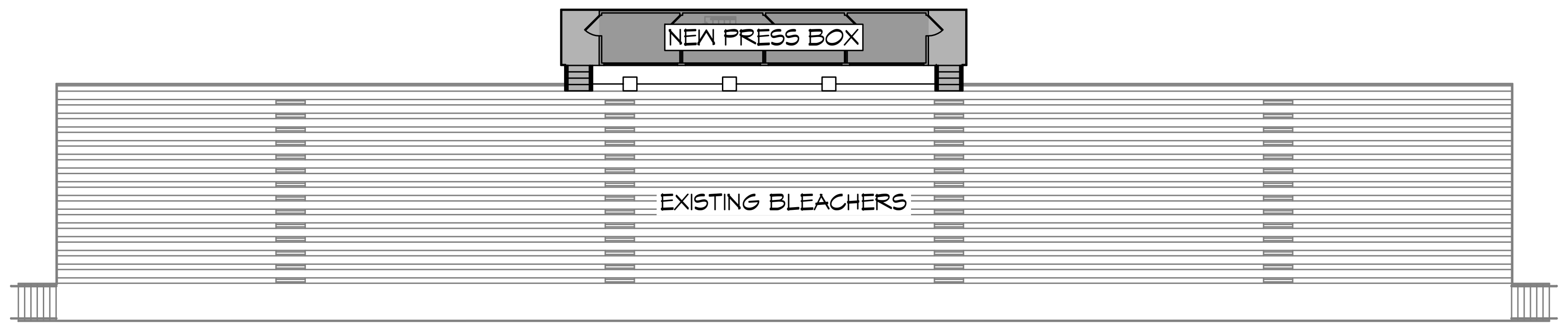
NEW PRESS BOX
EXISTING BLEACHERS

KEY PLAN
SCALE: NTS

PRESS BOX

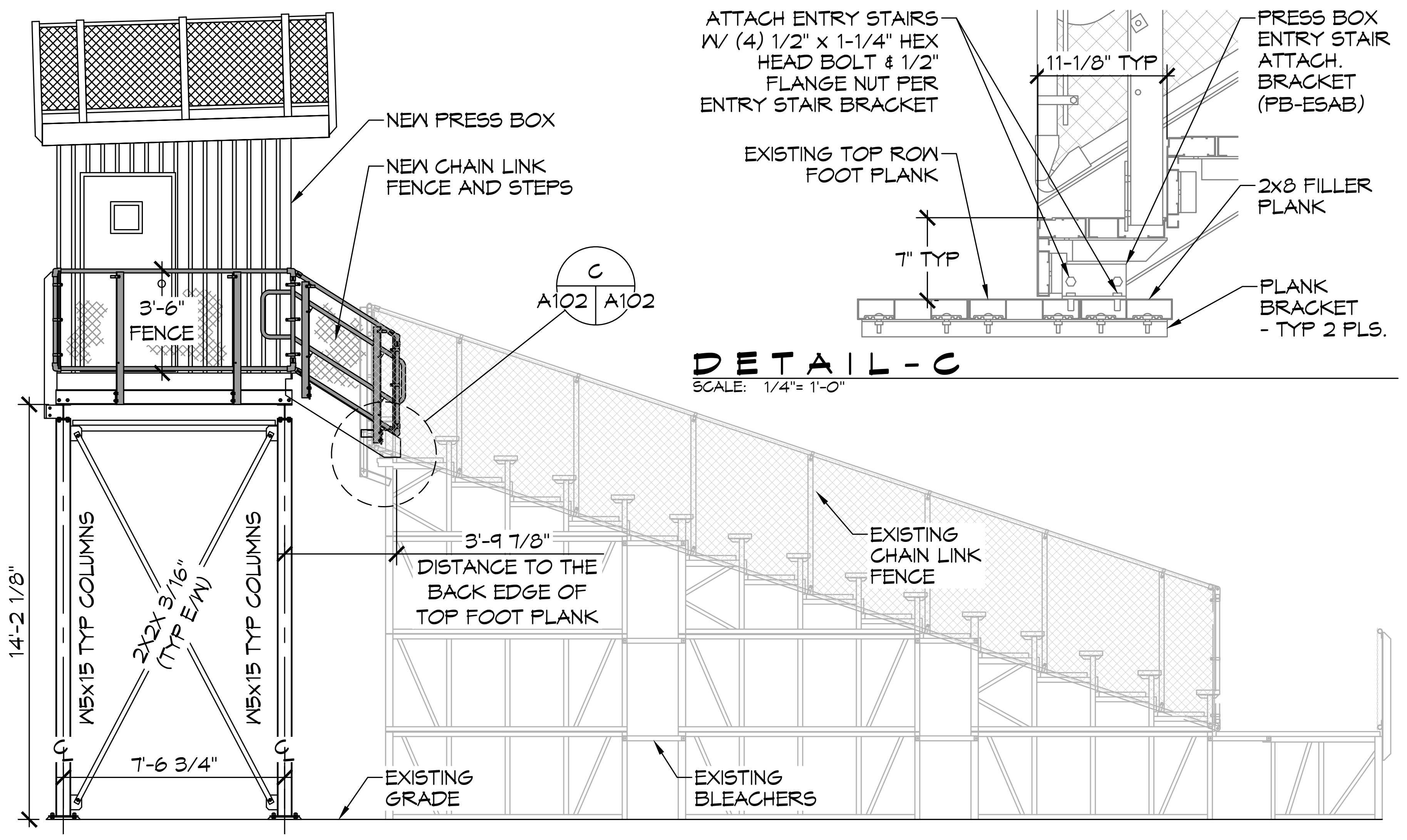
NEW PRESS BOX
NEW CHAIN LINK FENCE AND STEPS
3'-6" FENCE
C
A102 A102
3'-9 7/8" DISTANCE TO THE BACK EDGE OF TOP FOOT PLANK
EXISTING CHAIN LINK FENCE
14'-2 1/8"
W5x15 TYP COLUMNS
2X2X 3/16" (TYP E/W)
W5x15 TYP COLUMNS
7'-6 3/4"
EXISTING GRADE
EXISTING BLEACHERS

12 LEFT ELEVATION
SCALE: 1/4"= 1'-0"

ATTACH ENTRY STAIRS W/ (4) 1/2" x 1-1/4" HEX HEAD BOLT & 1/2" FLANGE NUT PER ENTRY STAIR BRACKET
11-1/8" TYP
PRESS BOX ENTRY STAIR ATTACH. BRACKET (PB-ESAB)
EXISTING TOP ROW FOOT PLANK
7" TYP
2x8 FILLER PLANK
PLANK BRACKET - TYP 2 PLS.

DETAIL-C
SCALE: 1/4"= 1'-0"

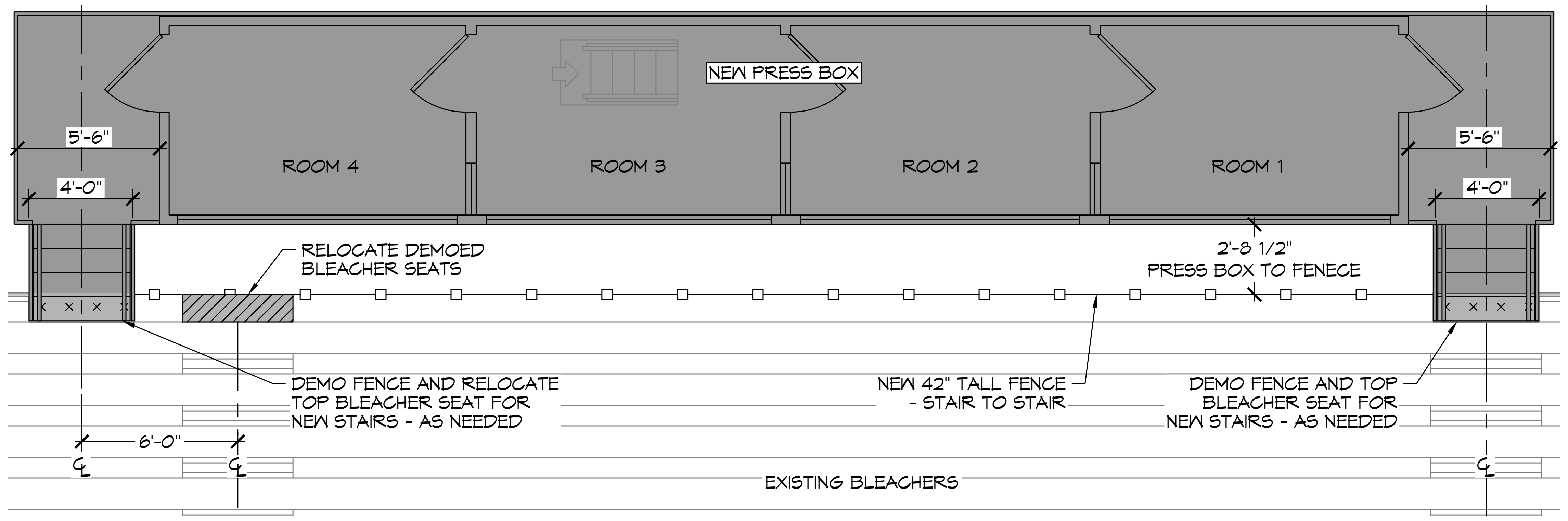
NEW PRESS BOX
5'-6"
4'-0"
ROOM 4
ROOM 3
ROOM 2
ROOM 1
5'-6"
4'-0"
RELOCATE DEMOED BLEACHER SEATS
2'-8 1/2" PRESS BOX TO FENECE
DEMO FENCE AND RELOCATE TOP BLEACHER SEAT FOR NEW STAIRS - AS NEEDED
NEW 42" TALL FENCE - STAIR TO STAIR
DEMO FENCE AND TOP BLEACHER SEAT FOR NEW STAIRS - AS NEEDED
6'-0"
EXISTING BLEACHERS

13 PRESS BOX PLAN VIEW
SCALE: 1/16" = 1'-0"

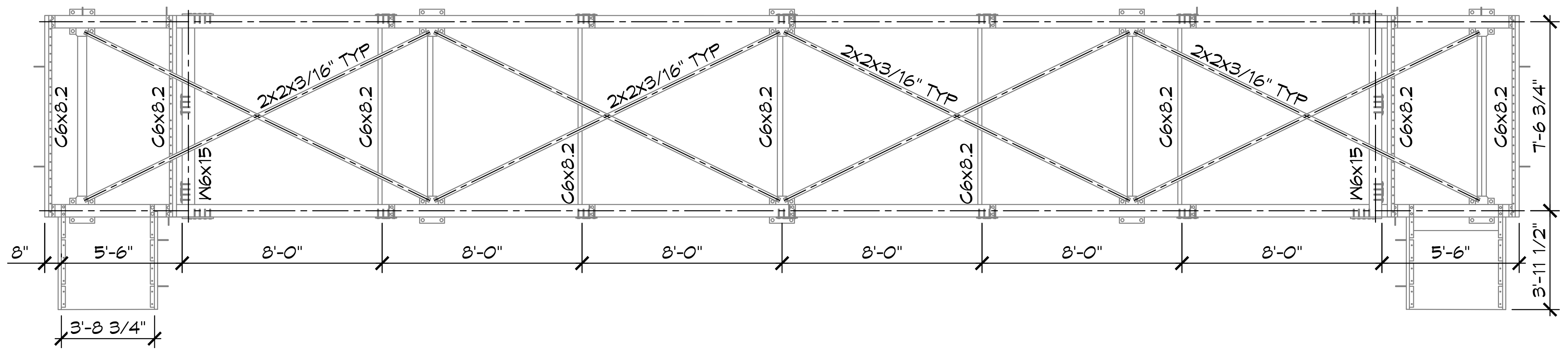
2X2X3/16" TYP
2X2X3/16" TYP
2X2X3/16" TYP
2X2X3/16" TYP
C6x8.2
C6x8.2
W6x15
C6x8.2
C6x8.2
C6x8.2
C6x8.2
C6x8.2
C6x8.2
W6x15
C6x8.2
C6x8.2
7'-6 3/4"
8"
5'-6"
8'-0"
8'-0"
8'-0"
8'-0"
8'-0"
8'-0"
5'-6"
3'-11 1/2"
3'-8 3/4"

15 PRESS BOX STRUCTURE
SCALE: 1/4"= 1'-0"

PLAN VIEW

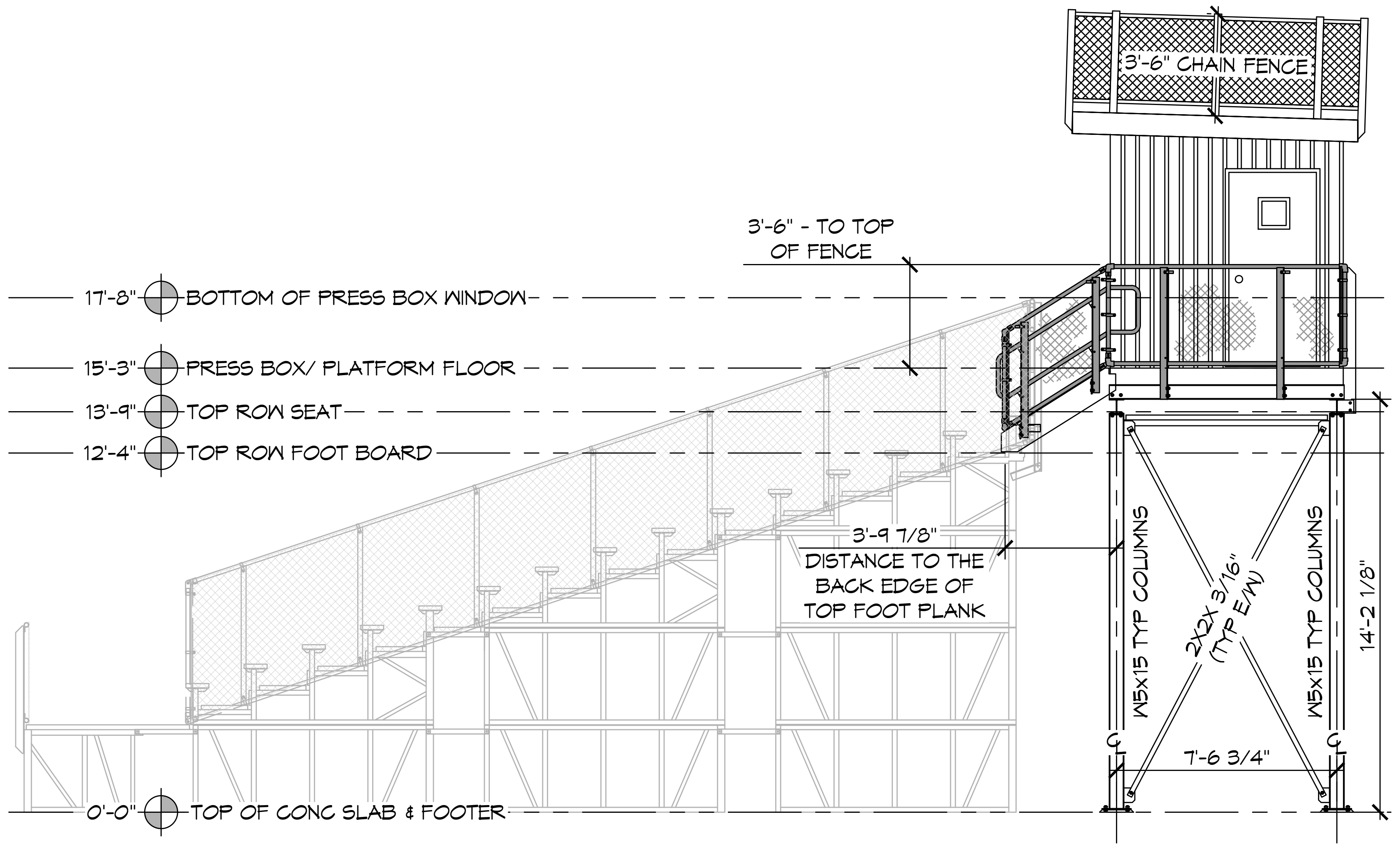
3'-6" CHAIN FENCE
3'-6" - TO TOP OF FENCE
17'-8" BOTTOM OF PRESS BOX WINDOW
15'-3" PRESS BOX/ PLATFORM FLOOR
13'-9" TOP ROW SEAT
12'-4" TOP ROW FOOT BOARD
3'-9 7/8" DISTANCE TO THE BACK EDGE OF TOP FOOT PLANK
W5x15 TYP COLUMNS
2X2X 3/16" (TYP E/W)
W5x15 TYP COLUMNS
14'-2 1/8"
7'-6 3/4"
0'-0" TOP OF CONC SLAB & FOOTER

14 RIGHT ELEVATION
SCALE: 1/4"= 1'-0"

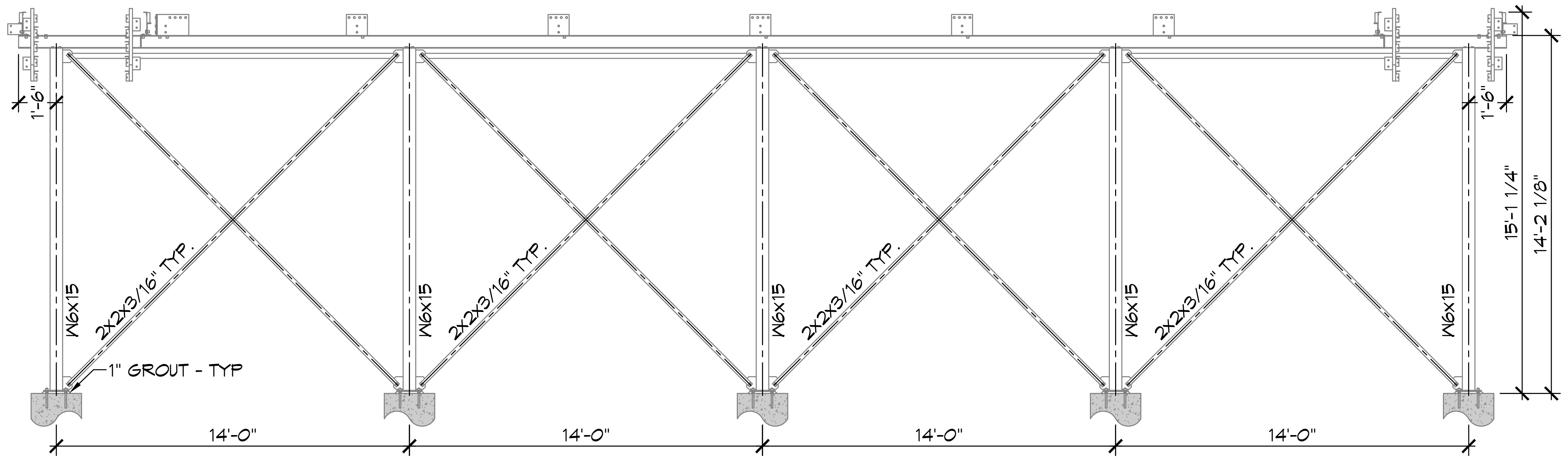
1'-6"
W6x15
2X2X3/16" TYP.
1" GROUT - TYP
W6x15
2X2X3/16" TYP.
W6x15
2X2X3/16" TYP.
W6x15
2X2X3/16" TYP.
W6x15
1'-6"
15'-1 1/4"
14'-2 1/8"
14'-0"
14'-0"
14'-0"
14'-0"

16 PRESS BOX STRUCTURE
SCALE: 1/4"= 1'-0"

WESTWARD/FRONT VIEW

DAMMON
ENGINEERING, INC.
LOUISIANA & MISSISSIPPI

Chief Engineer: Brian Mistich, PE
554 Old Spanish Trail
Slidell, LA 70458

www.dammonengineering.com
info@dammonengineering.com
PH: 985.649.5832

REVISIONS

#	DESCRIPTION	DATE

SEAL:

BRIAN A. MISTICH
License No. 30187

NEW PRESS BOX
SALMEN HIGH SCHOOL

300 SPARTAN DRIVE
SLIDELL, LA. 70458

JOB No: 2458 DATE: 06-20-2022
DRAWN BY: TNT CHECKED BY: JMS

The above drawings and specifications, designs and arrangements represented thereby are and shall remain the property of Dammon Engineering, and no part thereof shall be copied, disclosed to others, or used in connection with any work or project other than the specific project for which the have been prepared and developed without written consent of Dammon Engineering. Visual contact with these drawings or specifications shall constitute conclusive evidence of acceptance of these restrictions.

SHEET TITLE:
PRESS BOX LAYOUT & ELEVATIONS

DRAWING NUMBER:
A102

SHEET No: 6 of 7