STRUCTURAL STEEL FRAMING

SEE SHEET A-102 FOR ALL STRUCTURAL STEEL FRAMING.

GENERAL FOUNDATION NOTES

1. CONCRETE MIX SHALL HAVE A MINIMUM COMPRESSIVE STRENGTH OF 4000 PSI AT 28 DAYS. CONCRETE MIX SHALL BE IN ACCORDANCE WITH ACI-318.
2. ALL CONVENTIONAL REINFORCING STEEL SHALL MEET ASTM-A615 (GRADE 60).
3. ALL REINFORCING STEEL AND MESH SHALL BE SECURELY SUPPORTED TO PREVENT BOTH VERTICAL AND HORIZONTAL MOVEMENT DURING CONCRETE PLACEMENT.
4. THE CONTRACTOR SHALL VERIFY ALL DROPS, OFFSETS, DIMENSIONS AND CONFIGURATIONS.
5. GRADE BEAM DIMENSIONS MAY VARY BY -5%, +20%.
6. EXCAVATE FOUR FOOT DEPTH WHERE NEW FOOTINGS ARE LOCATED.
7. FILL, AS A MINIMUM QUALITY, SHALL BE 40% CLAY AND 60% SAND MIXTURE, PLACED IN 6" LIFTS AND COMPACTED TO A MINIMUM OF 95% STANDARD PROCTOR. FOOTINGS ARE DESIGNED TO USE SOIL WITH A BEARING PRESSURE OF 2000 LBS. PER SQUARE FOOT OR MORE. IT IS RECOMMENDED THAT THE CONTRACTOR VERIFY ALLOWABLE SOIL BEARING PRESSURE CAPACITY BY CONTRACTING THE SERVICES OF A SOILS ENGINEERING COMPANY.

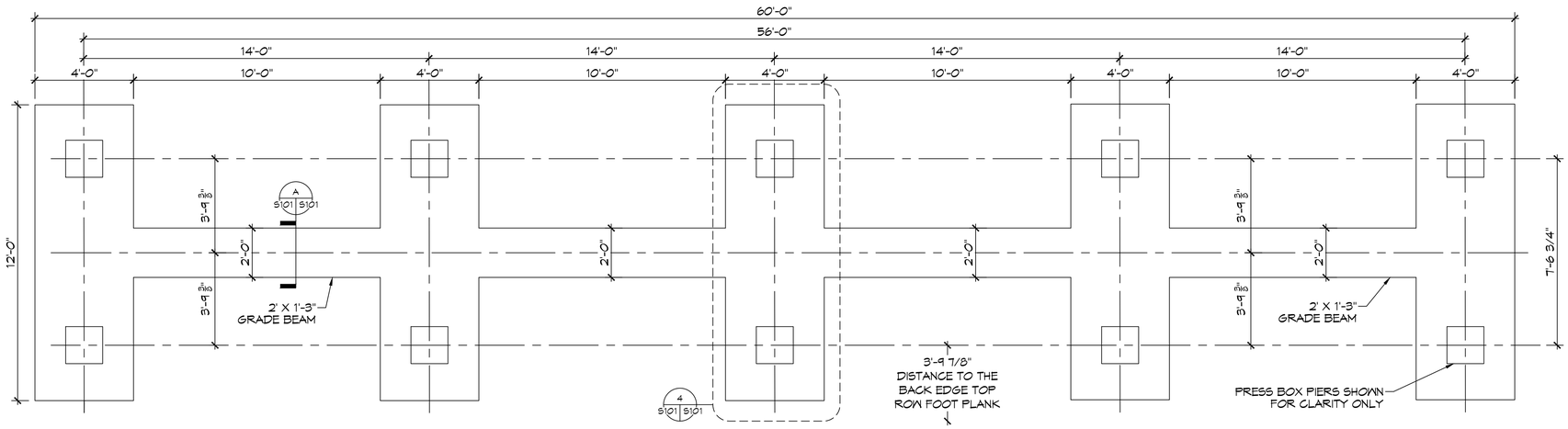

3 FOUNDATION PLAN

SCALE: 3/8"= 1'-0"

PRES BOX FOUNDATION

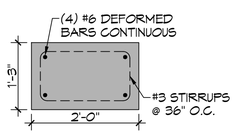

A FOUNDATION DETAIL

S101 S101

SCALE: 3/4" = 1'-0"

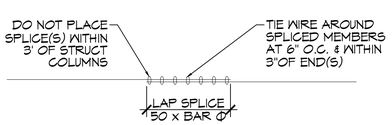

REBAR SPLICE

SCALE: 1/2" = 1'-0"

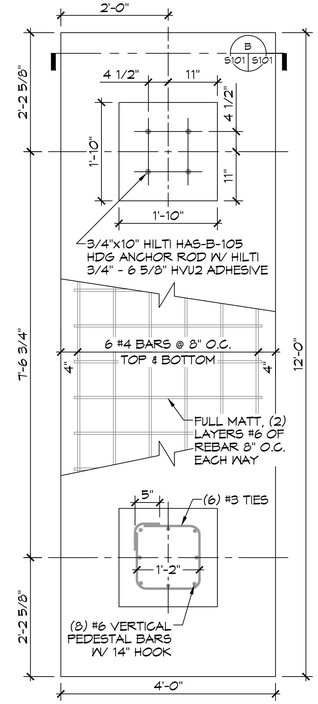

4 FOUNDATION DETAIL

S101 S101

SCALE: 3/4" = 1'-0"

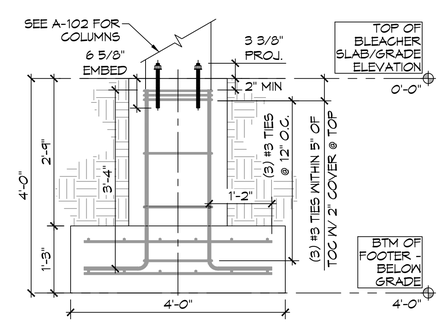

B FOUNDATION SECTION

S101 S101

SCALE: 3/4" = 1'-0"

DAMMON ENGINEERING, INC.
LOUISIANA & MISSISSIPPI
www.dammonengineering.com
info@dammonengineering.com
PH: 985.649.5832
Chief Engineer: Brian Mistich, PE
5544 Spartan Trail
Slidell, LA 70458

REVISIONS

#	DESCRIPTION	DATE

SEAL:

STATE OF LOUISIANA
BRIAN A. MISTICH
License No. 30187
8/12/2022
PROFESSIONAL ENGINEER

NEW PRESS BOX
SALMEN HIGH SCHOOL
300 SPARTAN DRIVE
SLIDELL, LA. 70458

JOB No:	2455
DATE:	07-14-2022
DRAWN BY:	TNT
CHECKED BY:	BAM

These drawings are the property of Dammon Engineering, and upon request shall be returned to Dammon Engineering upon completion of the work. Reproduction or publication of these drawings, or any portion thereof, shall be limited to which, the work covered and developed without written consent of Dammon Engineering, shall be considered an infringement of the rights of Dammon Engineering.

SHEET TITLE:
FOUNDATION PLAN & DETAILS

DRAWING NUMBER:
S101

SHEET No: 4 of 7

FILE NAME: J:\- Schools Public\ST TAMMANY PARISH SCHOOL BOARD\Salmen High School Press Box\Drawings\Current Drawings\S101 - Foundation Plan.dwg PLOT DATE & TIME: Thursday, December 15, 2022 12:18:30 PM