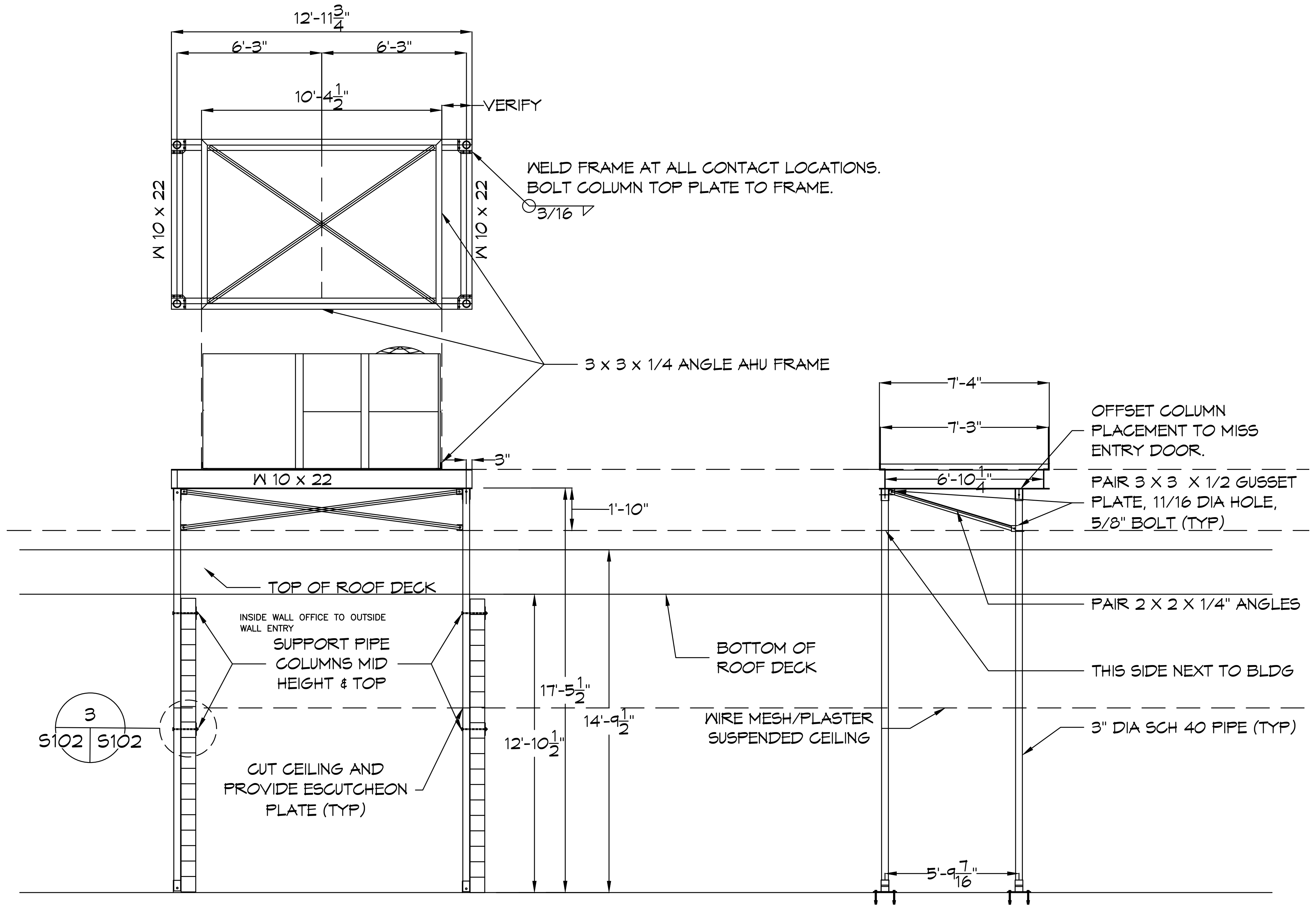
12'-11 3/4"
6'-3"
6'-3"
10'-4 1/2"
VERIFY
W 10 x 22
W 10 x 22
WELD FRAME AT ALL CONTACT LOCATIONS.
BOLT COLUMN TOP PLATE TO FRAME.
3/16
3 x 3 x 1/4 ANGLE AHU FRAME
3"
W 10 x 22
1'-10"
TOP OF ROOF DECK
INSIDE WALL OFFICE TO OUTSIDE WALL ENTRY
SUPPORT PIPE COLUMNS MID HEIGHT & TOP
3
S102 | S102
CUT CEILING AND PROVIDE ESCUTCHEON PLATE (TYP)
17'-5 1/2"
14'-9 1/2"
12'-10 1/2"
BOTTOM OF ROOF DECK
WIRE MESH/PLASTER SUSPENDED CEILING
7'-4"
7'-3"
6'-10 1/4"
OFFSET COLUMN PLACEMENT TO MISS ENTRY DOOR.
PAIR 3 X 3 X 1/2 GUSSET PLATE, 11/16 DIA HOLE, 5/8" BOLT (TYP)
PAIR 2 X 2 X 1/4" ANGLES
THIS SIDE NEXT TO BLDG
3" DIA SCH 40 PIPE (TYP)
5'-9 7/16"

B RTU-2
SCALE: 1/4"= 1'-0"

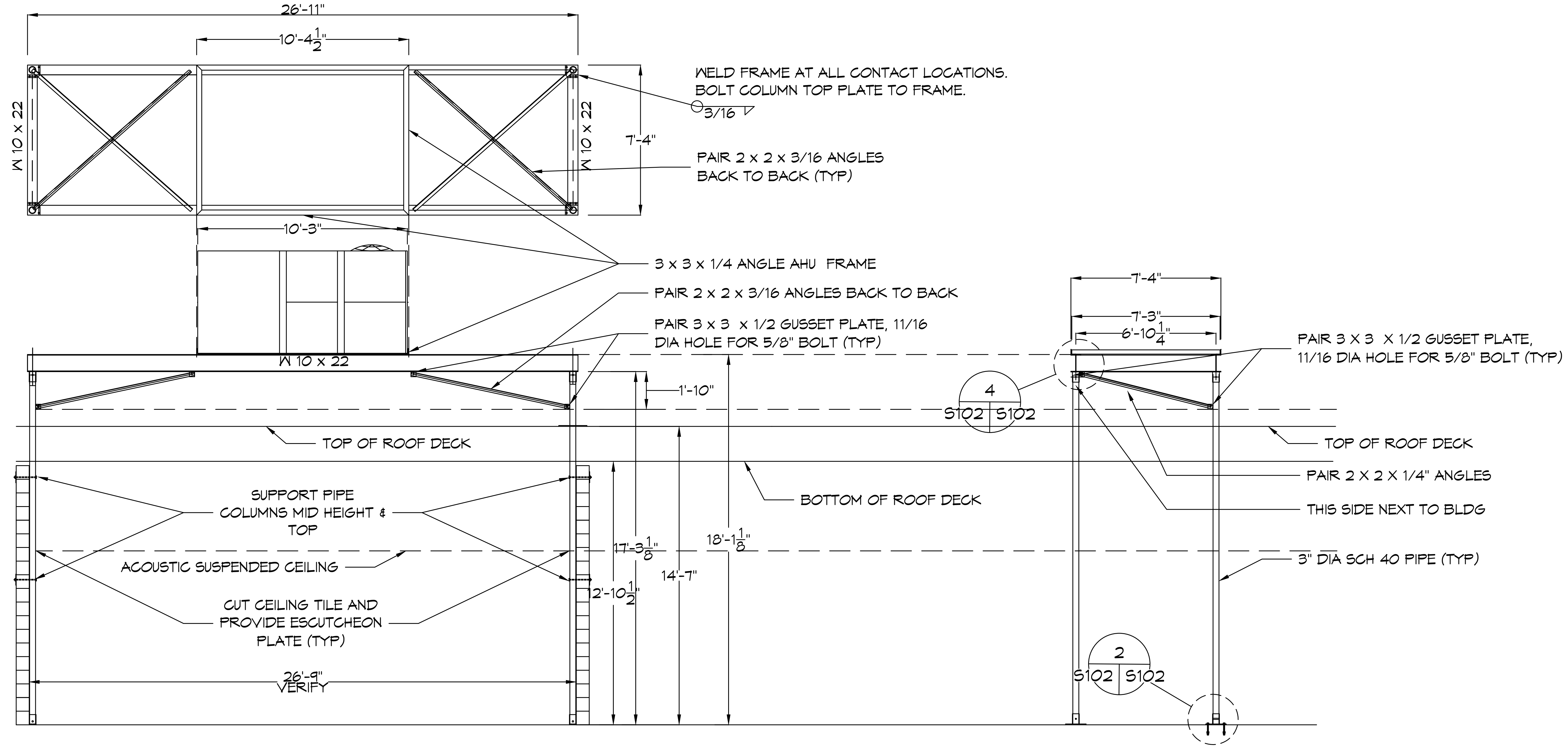
26'-11"
10'-4 1/2"
W 10 x 22
W 10 x 22
7'-4"
WELD FRAME AT ALL CONTACT LOCATIONS.
BOLT COLUMN TOP PLATE TO FRAME.
3/16
PAIR 2 x 2 x 3/16 ANGLES BACK TO BACK (TYP)
10'-3"
3 x 3 x 1/4 ANGLE AHU FRAME
PAIR 2 x 2 x 3/16 ANGLES BACK TO BACK
PAIR 3 x 3 x 1/2 GUSSET PLATE, 11/16 DIA HOLE FOR 5/8" BOLT (TYP)
W 10 x 22
1'-10"
TOP OF ROOF DECK
BOTTOM OF ROOF DECK
SUPPORT PIPE COLUMNS MID HEIGHT & TOP
ACOUSTIC SUSPENDED CEILING
CUT CEILING TILE AND PROVIDE ESCUTCHEON PLATE (TYP)
17'-3 1/8"
18'-1 1/8"
14'-7"
12'-10 1/2"
26'-9" VERIFY
7'-4"
7'-3"
6'-10 1/4"
4
S102 | S102
PAIR 3 X 3 X 1/2 GUSSET PLATE, 11/16 DIA HOLE FOR 5/8" BOLT (TYP)
TOP OF ROOF DECK
PAIR 2 X 2 X 1/4" ANGLES
THIS SIDE NEXT TO BLDG
3" DIA SCH 40 PIPE (TYP)
2
S102 | S102

A RTU-1
SCALE: 1/4"= 1'-0"

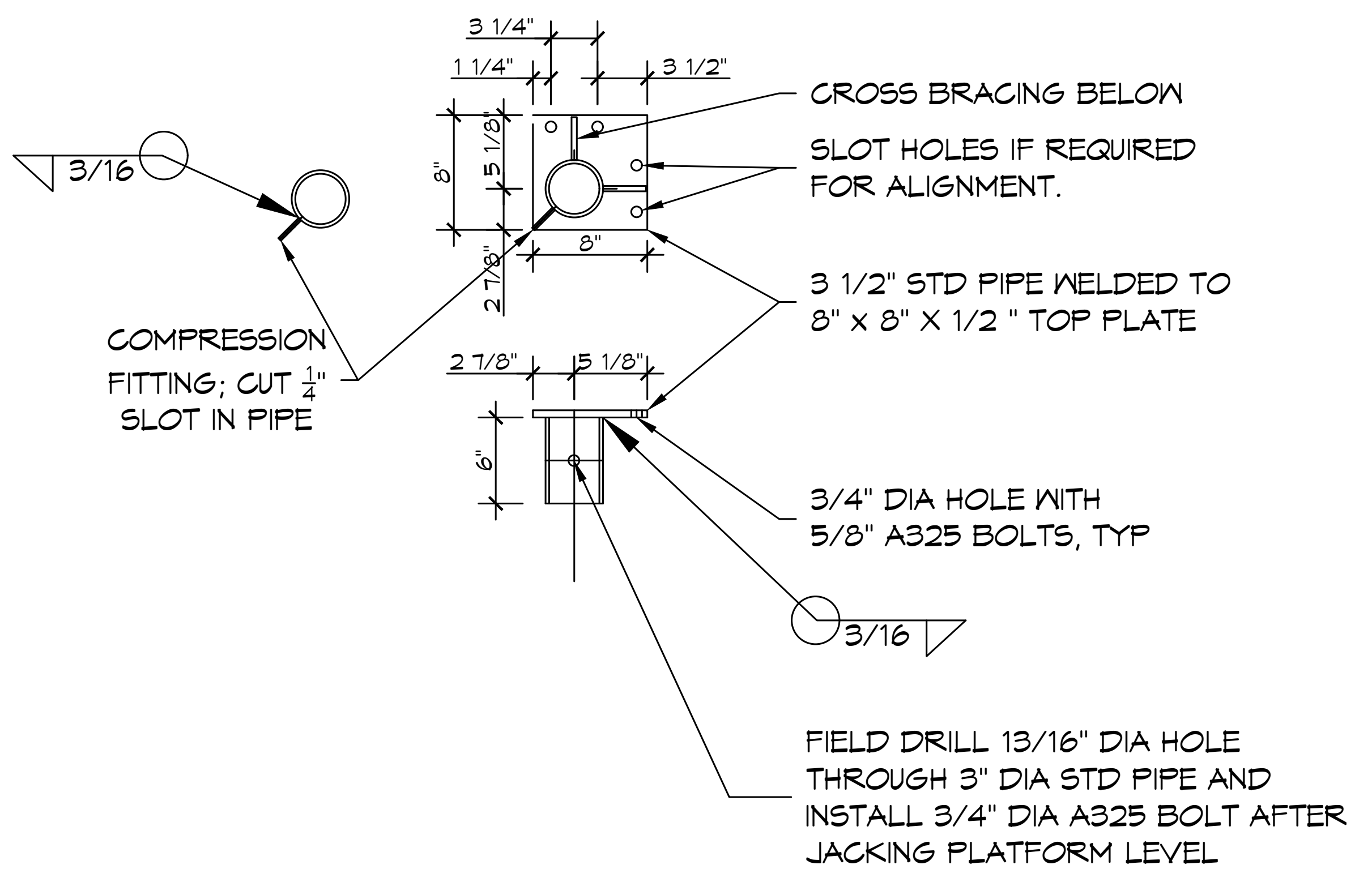
3/16
COMPRESSION FITTING; CUT 1/4" SLOT IN PIPE
3 1/4"
1 1/4"
3 1/2"
8"
5 1/8"
8"
2 7/8"
2 7/8"
5 1/8"
6"
CROSS BRACING BELOW
SLOT HOLES IF REQUIRED FOR ALIGNMENT.
3 1/2" STD PIPE WELDED TO 8" x 8" X 1/2 " TOP PLATE
3/4" DIA HOLE WITH 5/8" A325 BOLTS, TYP
3/16
FIELD DRILL 13/16" DIA HOLE THROUGH 3" DIA STD PIPE AND INSTALL 3/4" DIA A325 BOLT AFTER JACKING PLATFORM LEVEL

4 COLUMN TOP PLATE
SCALE: N.T.S.

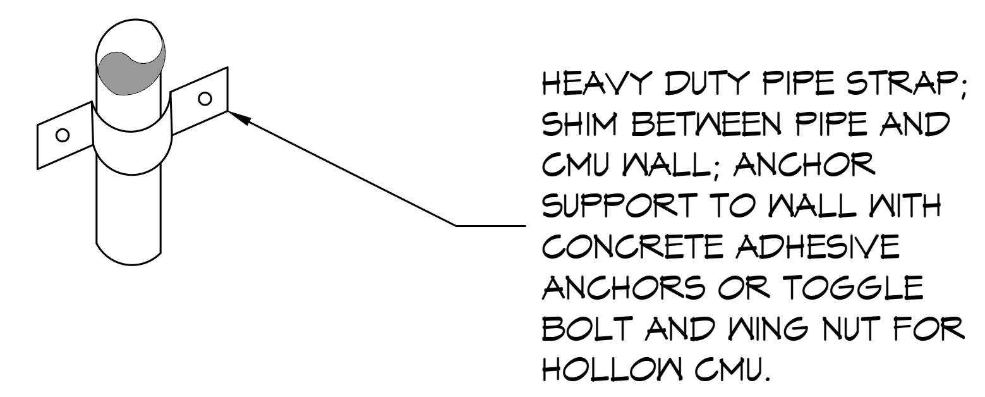
HEAVY DUTY PIPE STRAP; SHIM BETWEEN PIPE AND CMU WALL; ANCHOR SUPPORT TO WALL WITH CONCRETE ADHESIVE ANCHORS OR TOGGLE BOLT AND WING NUT FOR HOLLOW CMU.

3 COLUMN SUPPORT STRAP
SCALE: N.T.S.

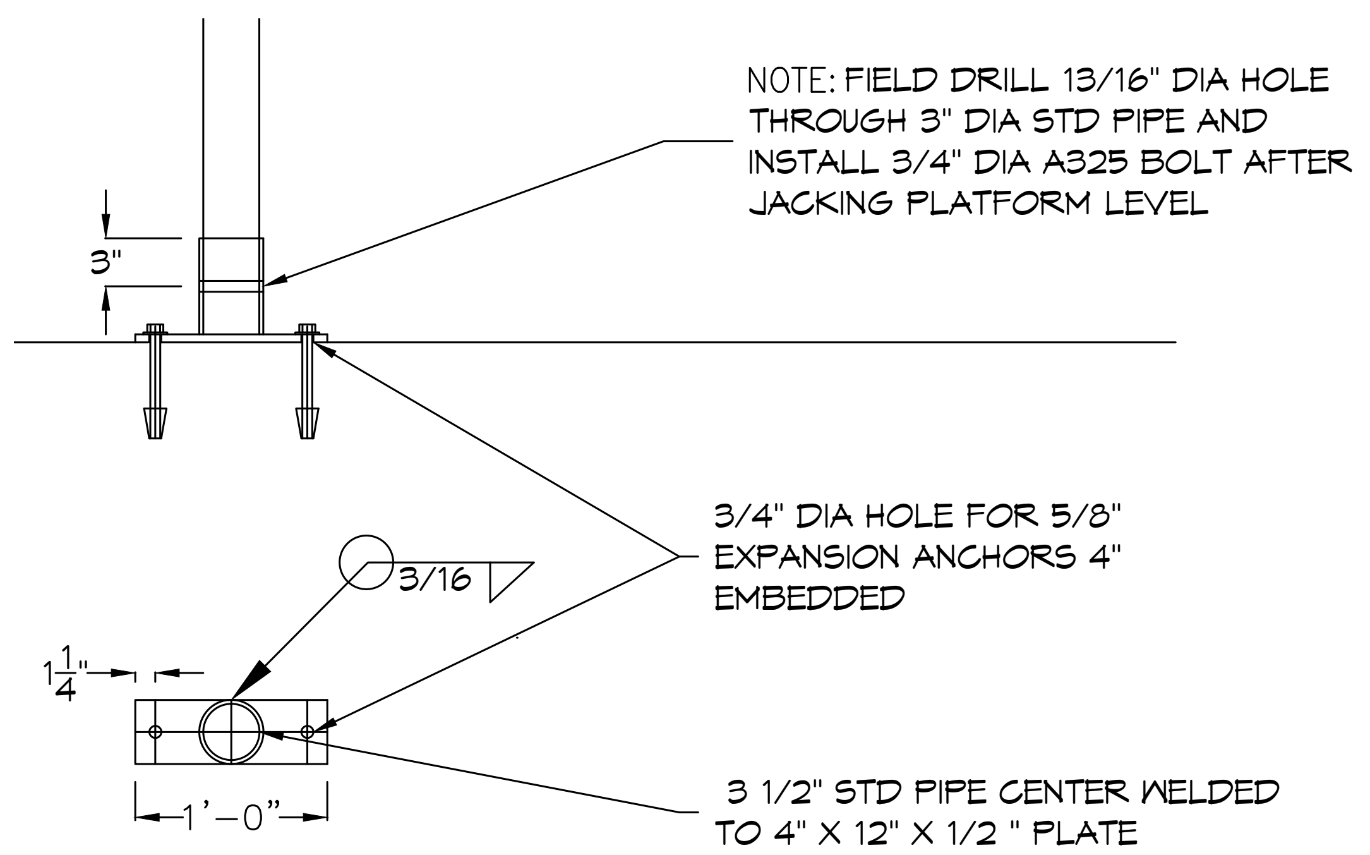
NOTE: FIELD DRILL 13/16" DIA HOLE THROUGH 3" DIA STD PIPE AND INSTALL 3/4" DIA A325 BOLT AFTER JACKING PLATFORM LEVEL
3"
3/16
1 1/4"
1'-0"
3/4" DIA HOLE FOR 5/8" EXPANSION ANCHORS 4" EMBEDDED
3 1/2" STD PIPE CENTER WELDED TO 4" X 12" X 1/2 " PLATE

2 COLUMN BASE PLATE
SCALE: N.T.S.

DAMMON
ENGINEERING, INC.
LOUISIANA & MISSISSIPPI

Chief Engineer: Brian Mistich, PE
554 Old Spanish Trail
Slidell, LA 70458

www.dammonengineering.com
info@dammonengineering.com
PH: 985.649.5832

REVISIONS

#	DESCRIPTION	DATE

SEAL:
BRIAN A. MISTICH
License No. 30187
12/29/2023

MECHANICAL RENOVATIONS
BOYET JUNIOR
HIGH SCHOOL
59295 Rebel Dr,
Slidell, LA 70461

JOB No: 2468
DATE: 12-29-2023
DRAWN BY: CKD
CHECKED BY: BAM

The above drawings and specifications, designs and arrangements represented thereby are and shall remain the property of Dammon Engineering, and no part thereof shall be copied, disclosed to others, or used in connection with any work or project other than the specific project for which the have been prepared and developed without written consent of Dammon Engineering. Visual contact with these drawings or specifications shall constitute conclusive evidence of acceptance of these restrictions.

SHEET TITLE:
STRUCTURAL DETAILS

DRAWING NUMBER:
S102