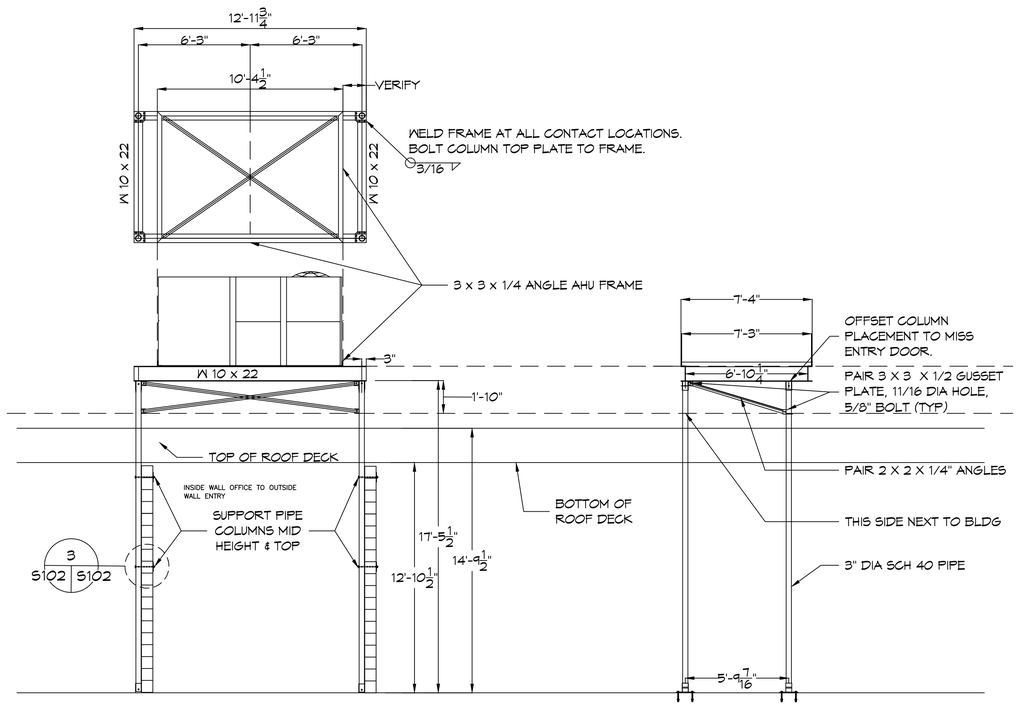

B RTU-2
SCALE: 1/4"= 1'-0"

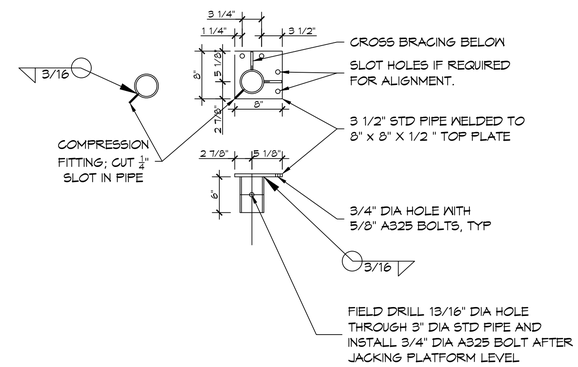

4 COLUMN TOP PLATE
SCALE: N.T.S.

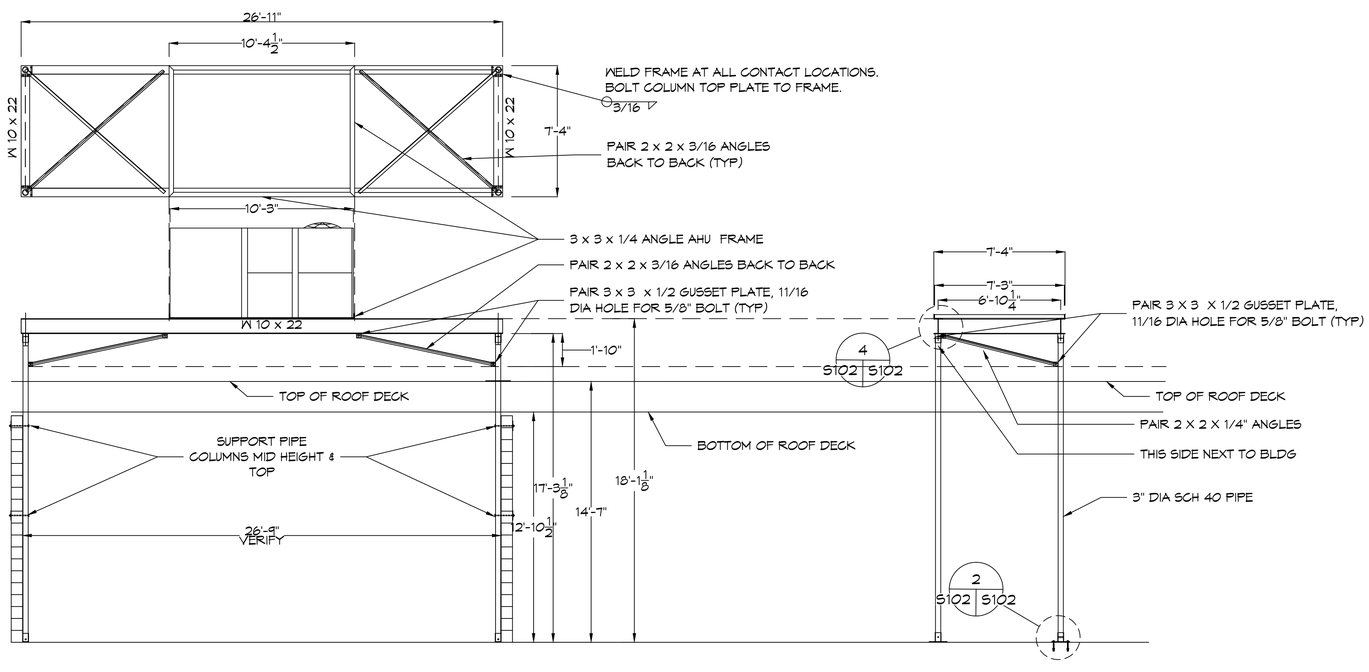

A RTU-1
SCALE: 1/4"= 1'-0"

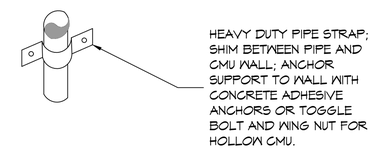

3 COLUMN SUPPORT STRAP
SCALE: N.T.S.

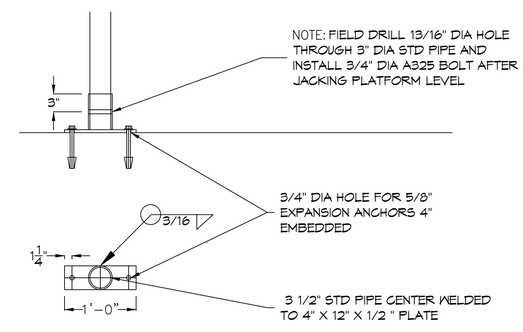

2 COLUMN BASE PLATE
SCALE: N.T.S.

DAMMON ENGINEERING, INC.
LOUISIANA & MISSISSIPPI
www.dammonengineering.com
info@dammonengineering.com
PH: 985.649.5832
Chief Engineer: Brian Mistich, PE
5540 Oakwood Trail
Slidell, LA 70458

#	DESCRIPTION	REVISIONS	DATE

SEAL:

STATE OF LOUISIANA
BRIAN A. MISTICH
License No. 30187
PROFESSIONAL ENGINEER
3/21/2022

MECHANICAL RENOVATIONS
BOYET JUNIOR HIGH SCHOOL
54295 Rebel Dr.
Slidell, LA 70461

JOB No:	2460	DATE:	3-7-2023
DRAWN BY:	CKD	CHECKED BY:	BAM

These drawings and specifications are the property of Dammon Engineering, Inc. and shall remain the property of Dammon Engineering, Inc. and are protected by the federal copyright laws. They are not to be used for any other purpose than specified without written permission of Dammon Engineering, Inc. Reproduction of these drawings and specifications, in whole or in part, is prohibited. Dammon Engineering, Inc. retains the right to demand the return of all drawings and specifications upon request.

SHEET TITLE:
STRUCTURAL DETAILS

DRAWING NUMBER:
S102

SHEET No: 4 of 9