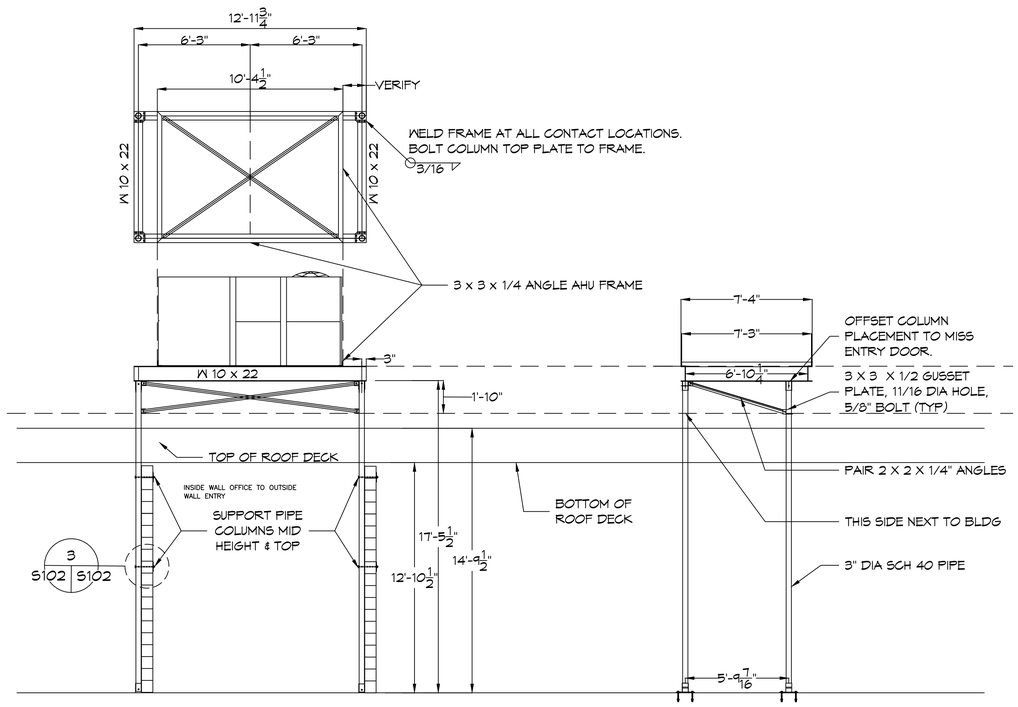


## B RTU-2
SCALE: 1/4"= 1'-0"

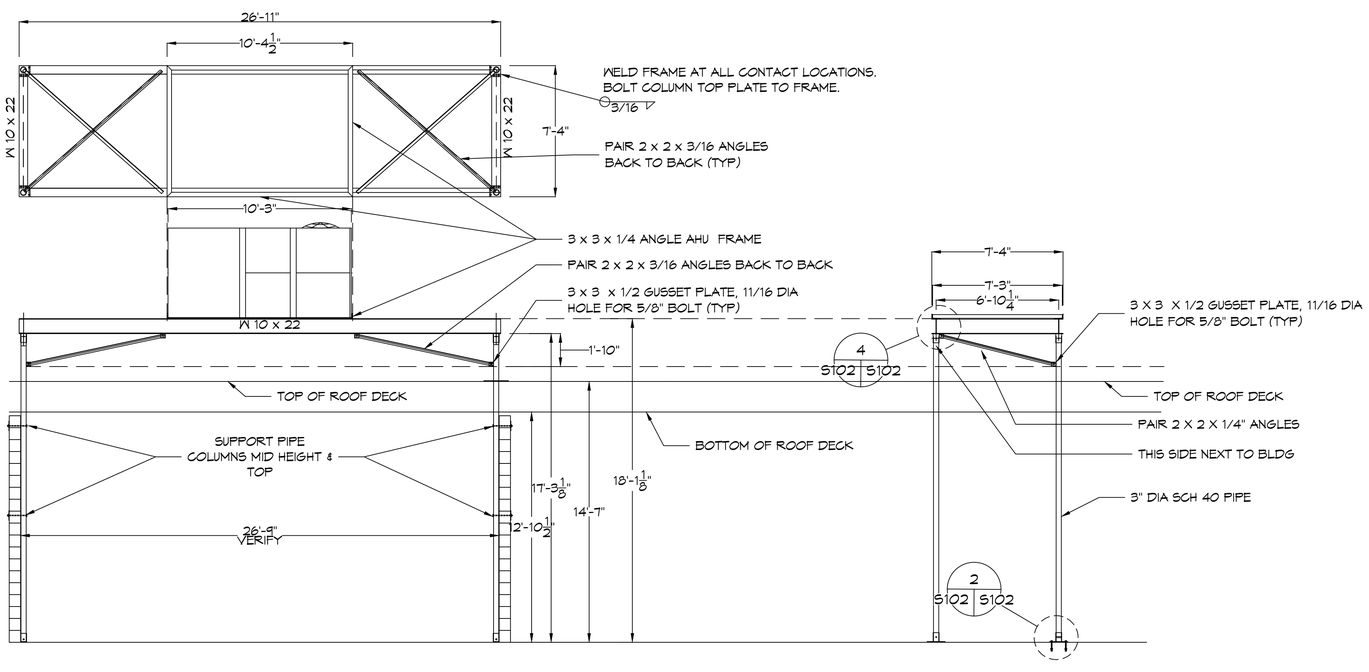


## A RTU-1
SCALE: 1/4"= 1'-0"

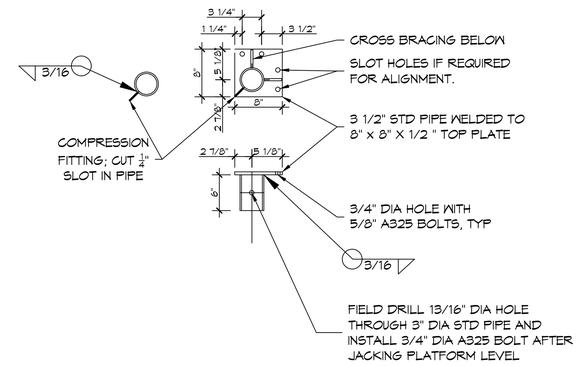


## 4 COLUMN TOP PLATE
SCALE: N.T.S.

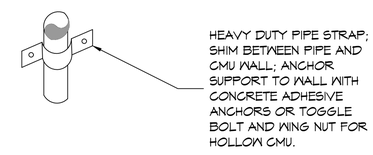


## 3 COLUMN SUPPORT STRAP
SCALE: N.T.S.

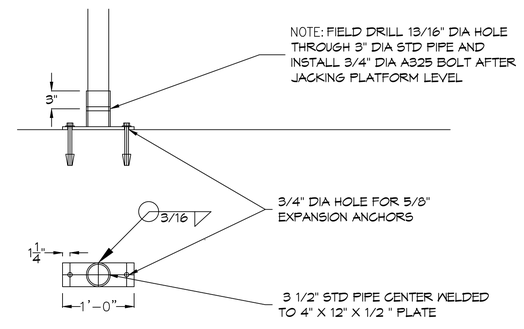


## 2 COLUMN BASE PLATE
SCALE: N.T.S.


DAMMON ENGINEERING, INC.
LOUISIANA & MISSISSIPPI
www.dammonengineering.com
info@dammonengineering.com
PH: 985.649.5832
Chief Engineer: Brian Mistich, PE
5500 Oakwood Trail
Slidell, LA 70458


| # | DESCRIPTION | REVISIONS | DATE |
|---|---|---|---|

SEAL:

STATE OF LOUISIANA
BRIAN A. MISTICH
License No. 30187
PROFESSIONAL ENGINEER
3/21/2022

MECHANICAL RENOVATIONS
BOYET JUNIOR HIGH SCHOOL
54295 Rebel Dr.
Slidell, LA 70461

| JOB No: | 2460 | DATE: | 3-7-2023 |
|---|---|---|---|
| DRAWN BY: | CKD | CHECKED BY: | BAM |


THESE DRAWINGS AND SPECIFICATIONS, AS INSTRUMENTS OF SERVICE, ARE AND SHALL REMAIN THE PROPERTY OF DAMMON ENGINEERING, INC. THEY ARE TO BE USED ONLY FOR THIS PROJECT AND NOT TO BE LOANED OR COPIED IN WHOLE OR IN PART WITHOUT THE WRITTEN PERMISSION OF DAMMON ENGINEERING, INC. THESE DRAWINGS AND SPECIFICATIONS WERE PREPARED AND APPROVED BY THE PROFESSIONAL ENGINEER PRESENT FOR THE PURPOSE OF THIS PROJECT ONLY.


SHEET TITLE:
STRUCTURAL DETAILS

DRAWING NUMBER:
S102

SHEET No: 4 of 9