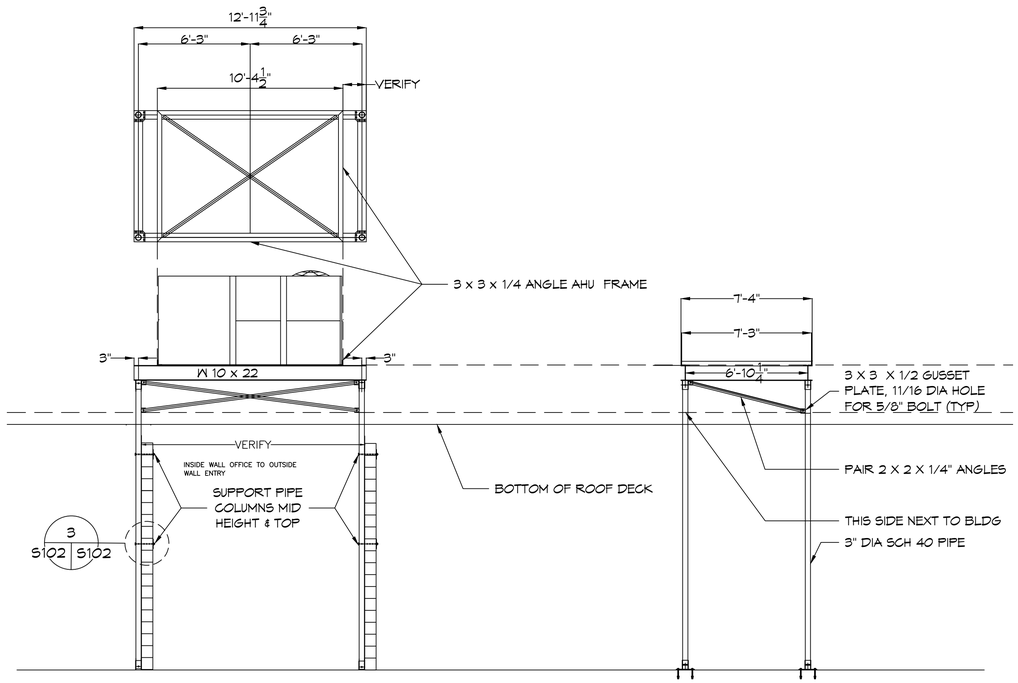

B RTU-2
SCALE: 1/4"= 1'-0"

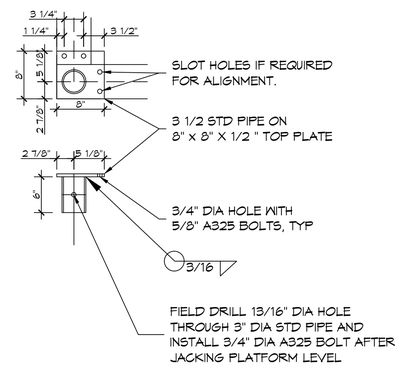

4 COLUMN TOP PLATE
SCALE: N.T.S.

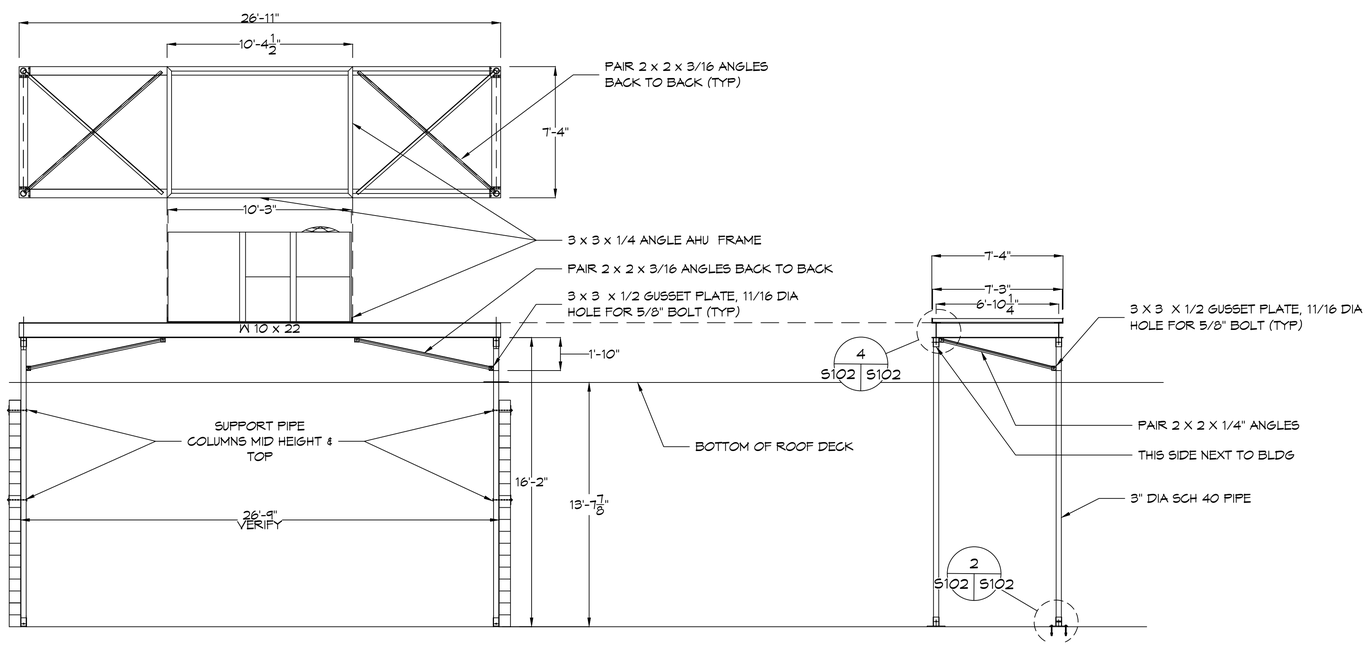

A RTU-1
SCALE: 1/4"= 1'-0"

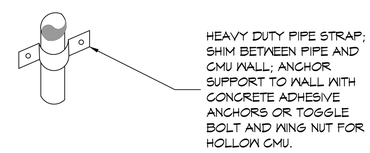

3 COLUMN SUPPORT STRAP
SCALE: N.T.S.

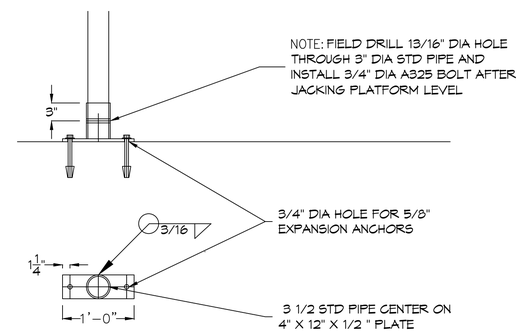

2 COLUMN BASE PLATE
SCALE: N.T.S.

DAMMON ENGINEERING, INC.
LOUISIANA & MISSISSIPPI
www.dammonengineering.com
info@dammonengineering.com
PH: 985.649.5832
Chief Engineer: Brian Mistich, PE
5540 Crosswalk Trail
Slidell, LA 70458

#	DESCRIPTION	REVISIONS	DATE

SEAL:

Not For Construction

MECHANICAL RENOVATIONS
BOYET JUNIOR HIGH SCHOOL
55295 Rebel Dr.
Slidell, LA 70461

JOB No:	2463
DATE:	3-7-2023
DRAWN BY:	CKD
CHECKED BY:	BAM

THIS DOCUMENT IS THE PROPERTY OF DAMMON ENGINEERING, INC. AND MUST BE RETURNED UPON REQUEST. THIS DOCUMENT AND ANY REPRODUCTIONS THEREOF MUST NOT BE USED FOR OTHER PROJECTS OR PURPOSES, NOR MUST INFORMATION CONTAINED HEREIN BE DISCLOSED TO OTHERS WITHOUT WRITTEN CONSENT OF DAMMON ENGINEERING, INC. THIS DOCUMENT IS THE INSTRUMENT OF SERVICE FOR THE PROJECT FOR WHICH IT WAS PREPARED AND WAS PREPARED WITHOUT WRITTEN CONSENT OF DAMMON ENGINEERING, INC. THIS DOCUMENT IS NOT TO BE USED FOR ANY OTHER PROJECT.

SHEET TITLE:
STRUCTURAL DETAILS

DRAWING NUMBER:
S102

SHEET No: 4 of 9

FILE NAME: J:\- Schools Public\ST TAMMANY PARISH SCHOOL BOARD\2463 - Boyet Junior High School Gym\Current Dwgs\2102 - Structural Details.dwg PLOT DATE & TIME: Friday, March 3, 2023 1:28:48 PM