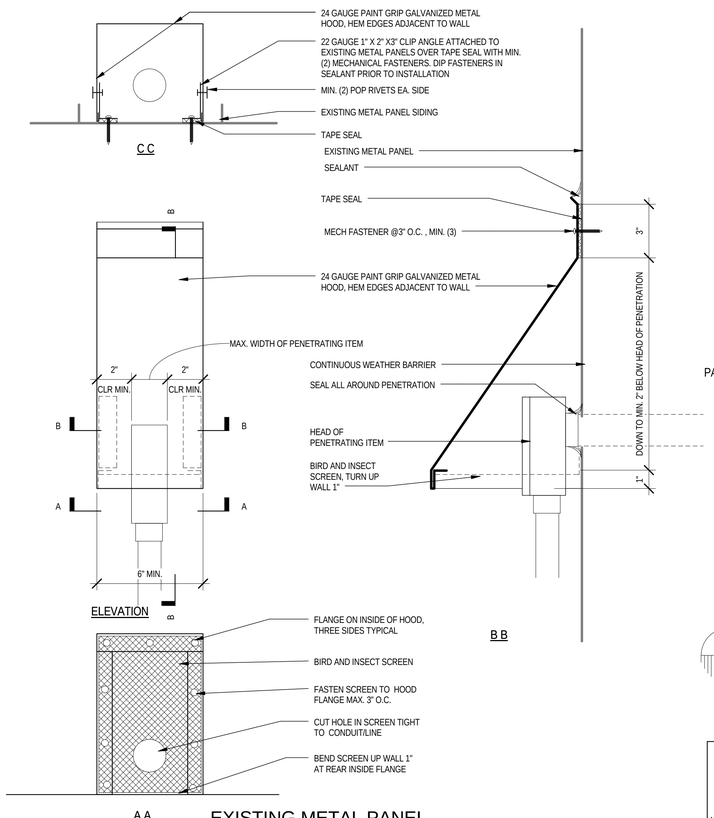

EXISTING METAL PANEL WALL PENETRATION, TYPICAL

7 A270 3" = 1'-0"

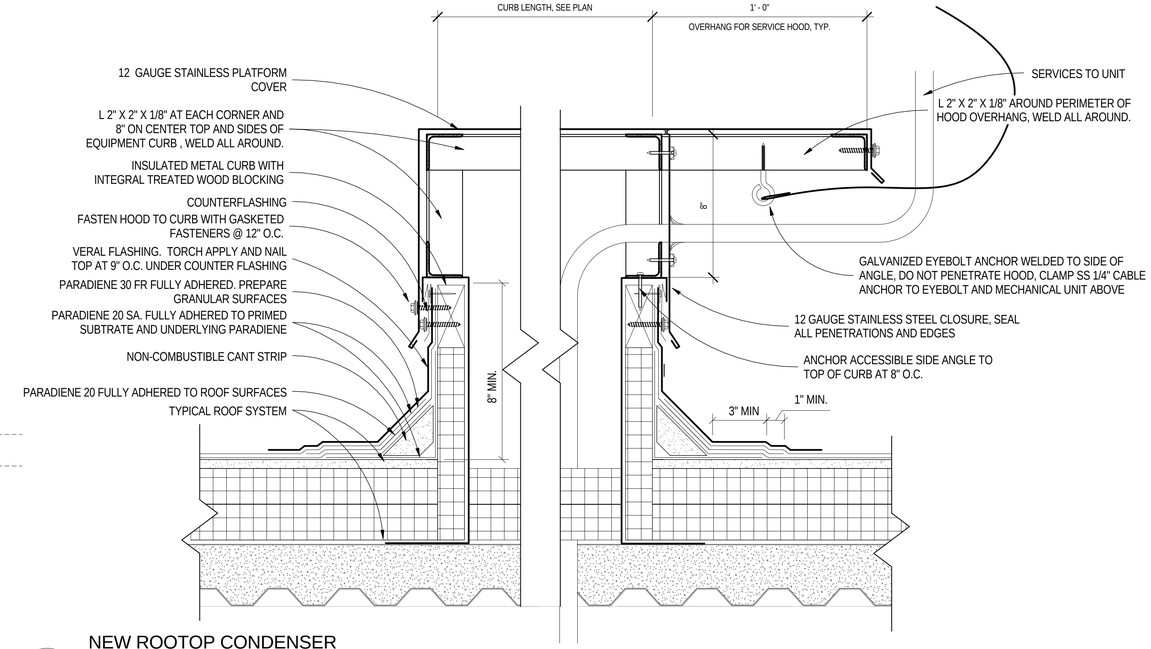

NEW ROOTOP CONDENSER CURB

4 A270 3" = 1'-0"

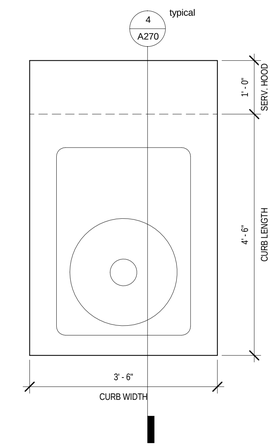

2 New 42"x54" Curb

A270 3/4" = 1'-0"

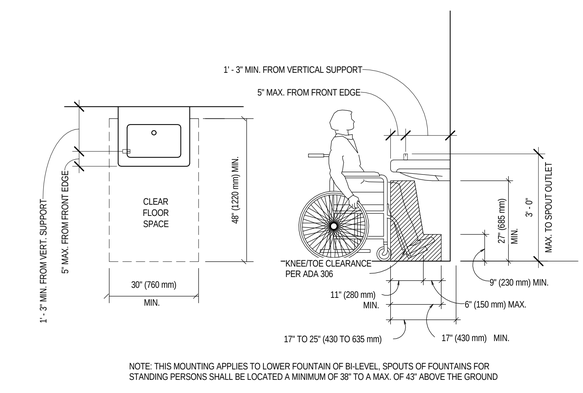

NOTE: THIS MOUNTING APPLIES TO LOWER FOUNTAIN OF BI-LEVEL. SPOUTS OF FOUNTAINS FOR STANDING PERSONS SHALL BE LOCATED A MINIMUM OF 38" TO A MAX. OF 43" ABOVE THE GROUND

5 ADA Water Fountain Clearances

A270 1/2" = 1'-0"

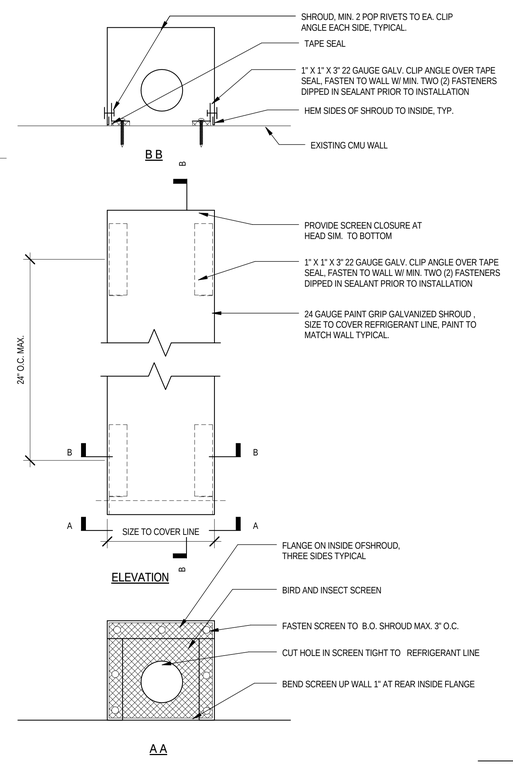

6 METAL SHROUD, TYPICAL

A270 3" = 1'-0"

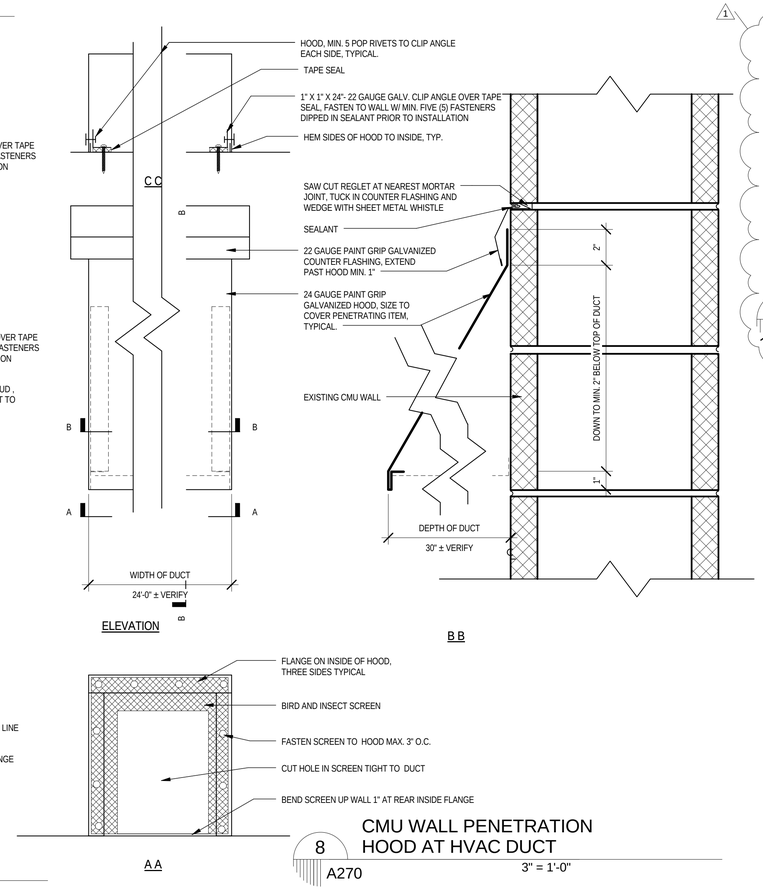

8 CMU WALL PENETRATION HOOD AT HVAC DUCT

A270 3" = 1'-0"

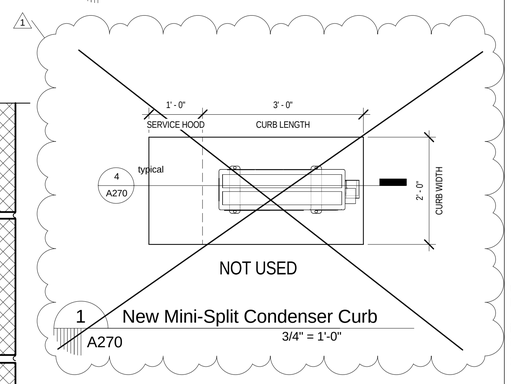

1 New Mini-Split Condenser Curb

A270 3/4" = 1'-0"

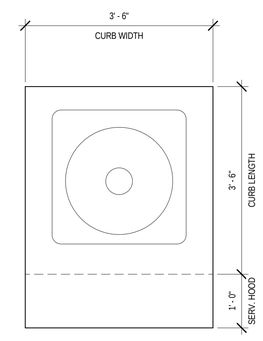

3 New 42"x 42" Curb

A270 3/4" = 1'-0"

msh
nodes space sunlight architects
229 east kirkland street covington louisiana 70433
phone: 985.898.0303 fax: 985.898.0304
email: studio@msh-architects.com
www.msh-architects.com

Boyet Junior High School Gymnasium & Library Roof Repairs
592295 Rebel Drive, Slidell, Louisiana

issue date for revisions
1 2/24/2017

issue date for permitting
02.02.2017

issue date for bid
02.02.2017

issue date for construction
02.02.2017

job no.
1701

sheet title
penetration & roof details

sheet no.
A270

© 2017 msh architects llc

2/24/2017 11:45:19 AM