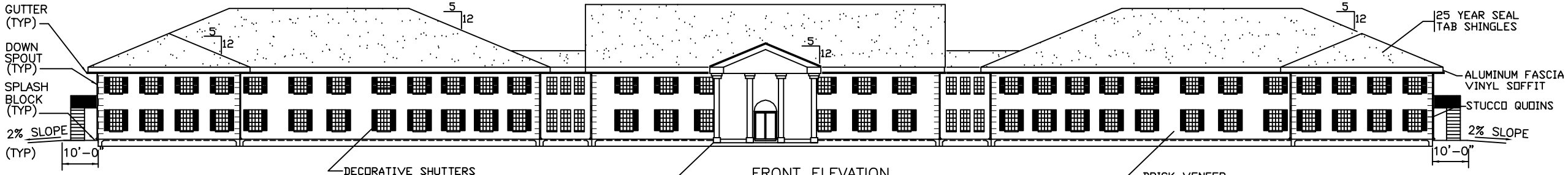

FRONT ELEVATION
SCALE: 1/16" = 1'-0"

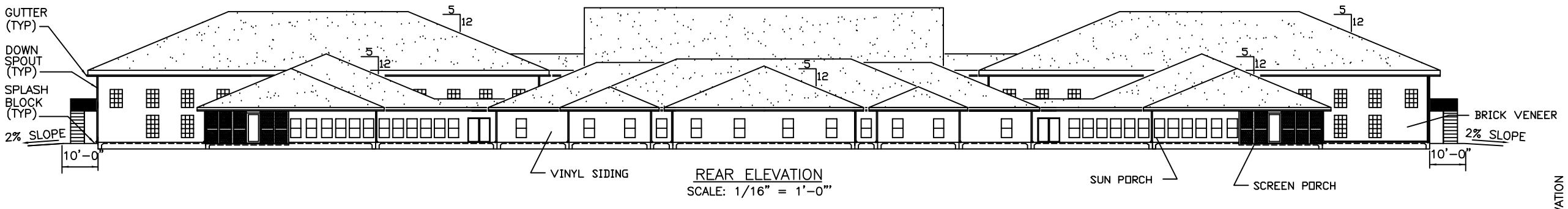

REAR ELEVATION
SCALE: 1/16" = 1'-0"

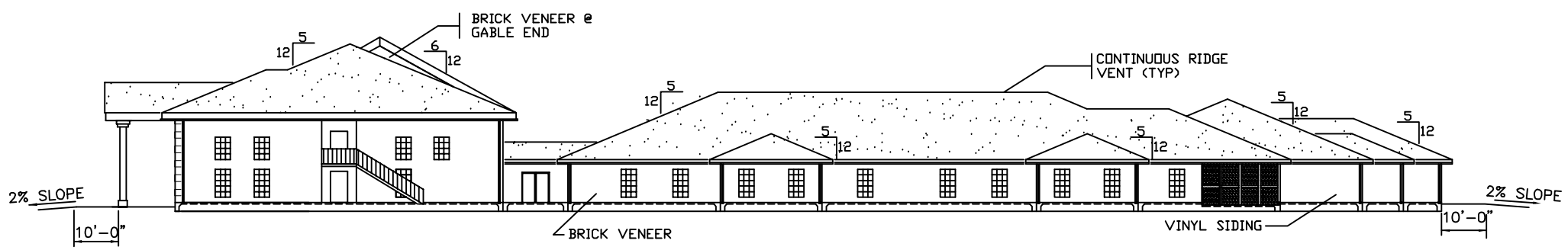

RIGHT ELEVATION
SCALE: 1/16" = 1'-0"

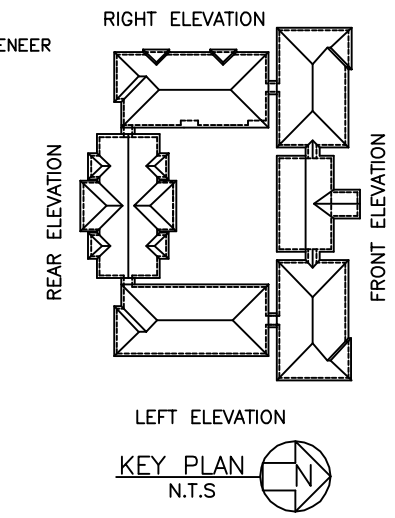

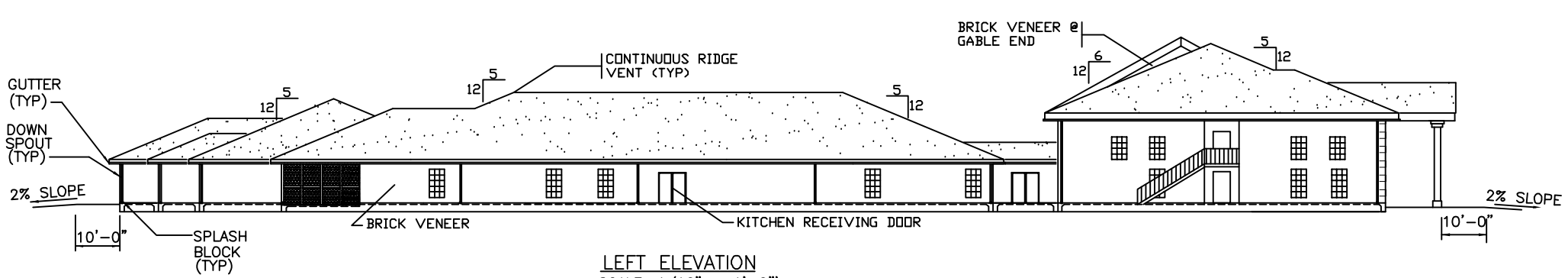

LEFT ELEVATION
SCALE: 1/16" = 1'-0"

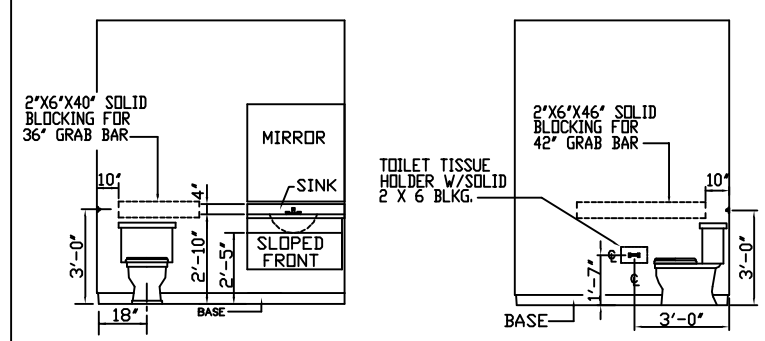

TYPICAL BATHROOM
N.T.S.

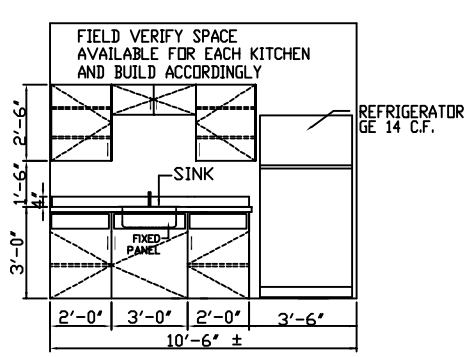

TYPICAL KITCHEN
N.T.S.

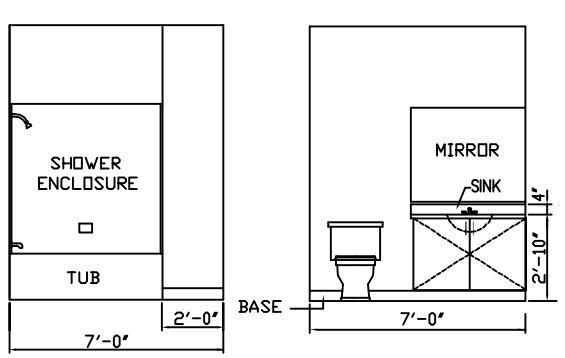

TYPICAL BATHROOM
N.T.S.

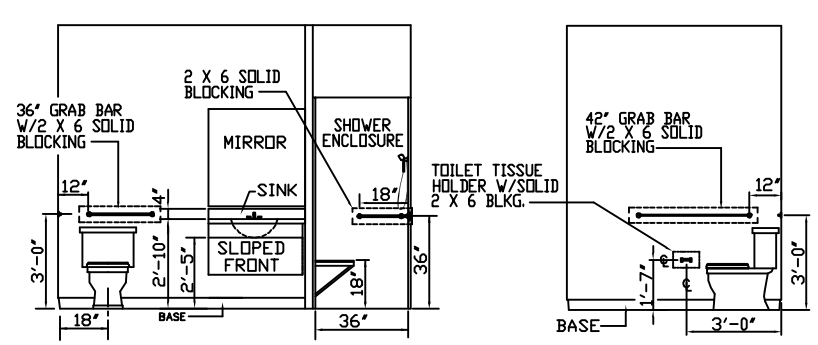

TYPICAL HDCP BATHROOM
N.T.S.

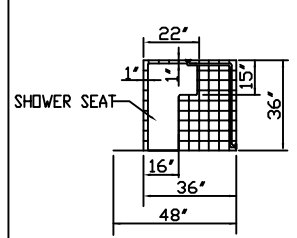

HDCP SHOWER PLAN VIEW
N.T.S.

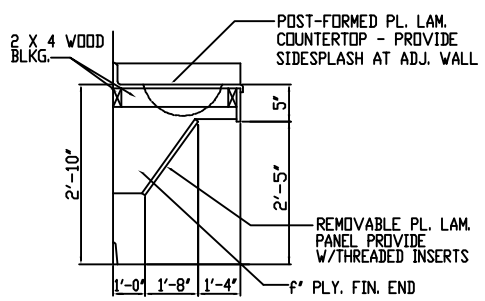

TYPICAL HDCP VANITY
N.T.S.

REVISED 01/03/01

MARK DEVELOPMENT, LLC.

CAMELLIA GARDENS
POSSUM HOLLOW ROAD
SLIDELL, LA

"CAMELLIA GARDENS"

DAMMON ENGINEERING, INC.
ARCHITECTS - ENGINEERS
819 ROBERT ROAD SLIDELL LA. 70458

SCALE: AS NOTED
FILE: –
JOB No.: –
DATE: 07/28/00
SHEET –
A–20
OF –