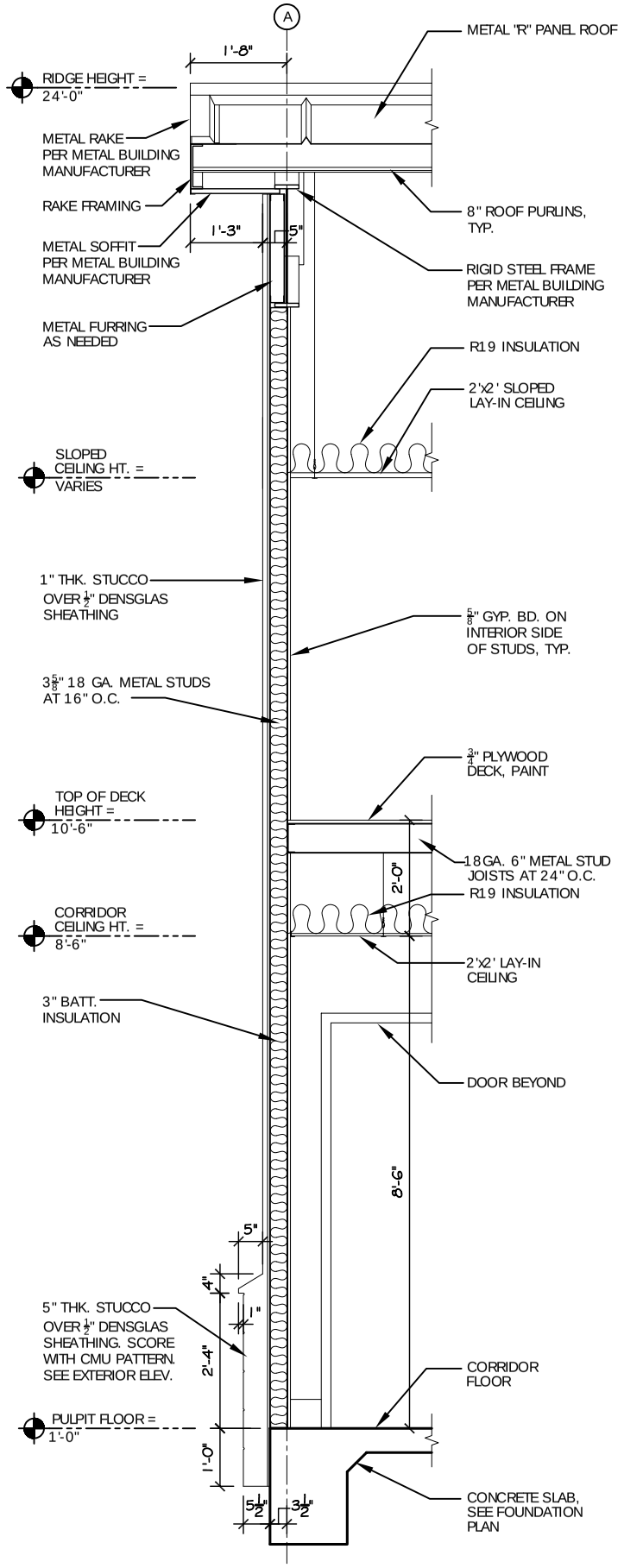

WALL SECTION (H / A6.A5)
SCALE: 3/4"= 1'

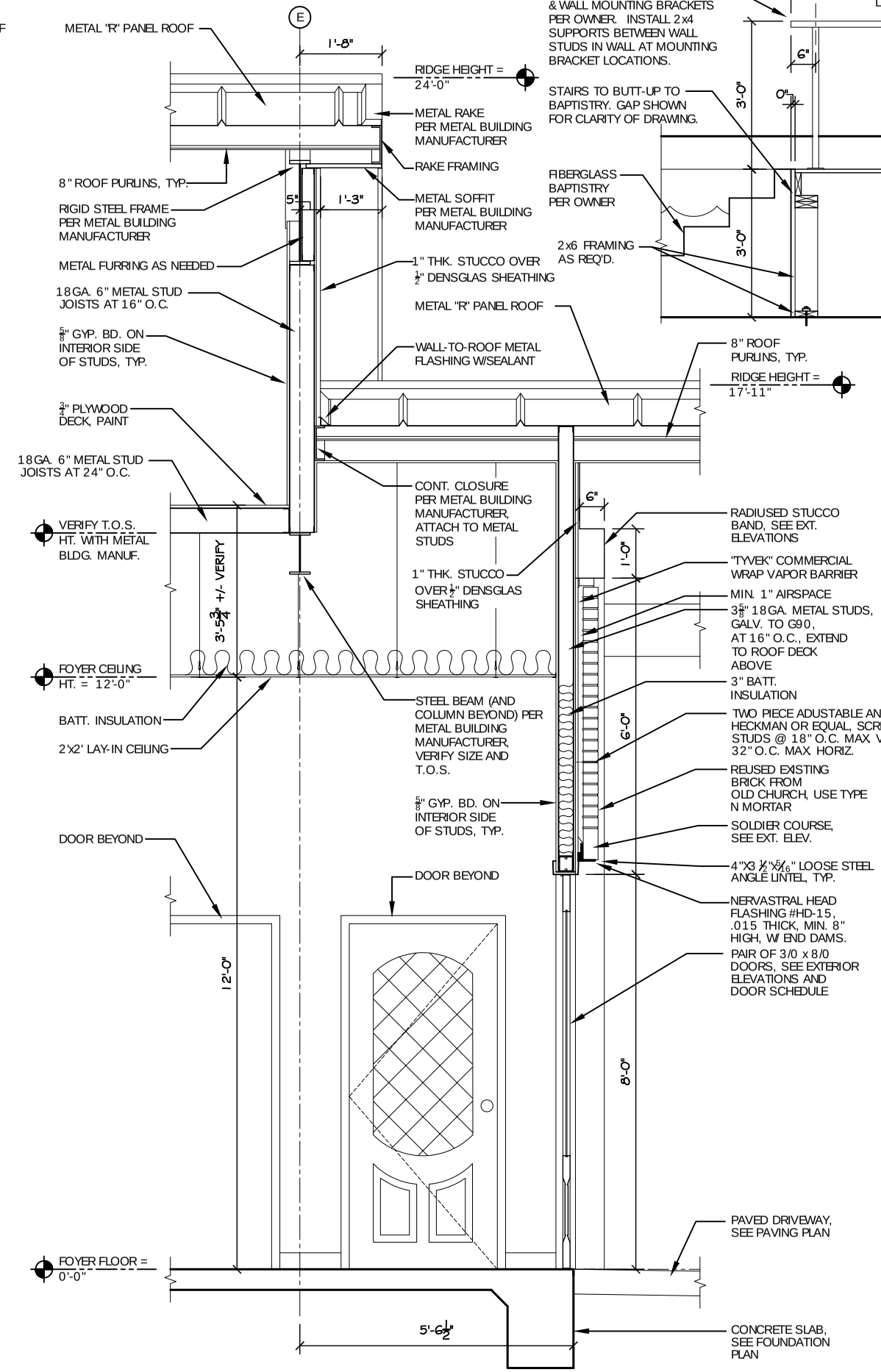

WALL SECTION (J / A6.A5)
SCALE: 3/4"= 1'

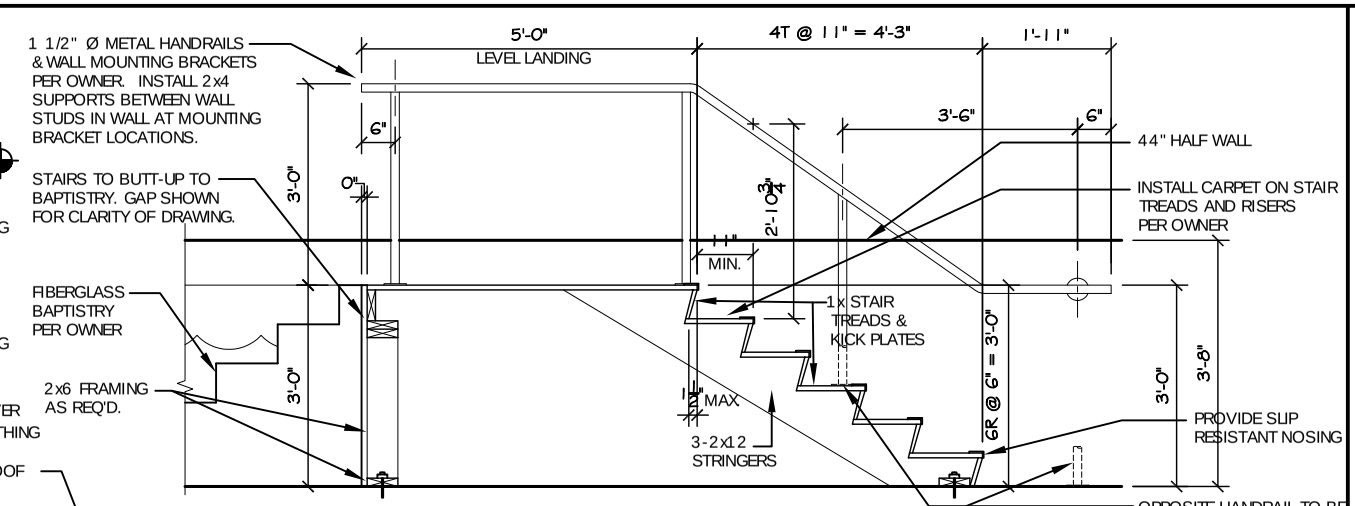

DETAIL THRU BAPTISTRY STAIRS
SCALE: 3/4"= 1'

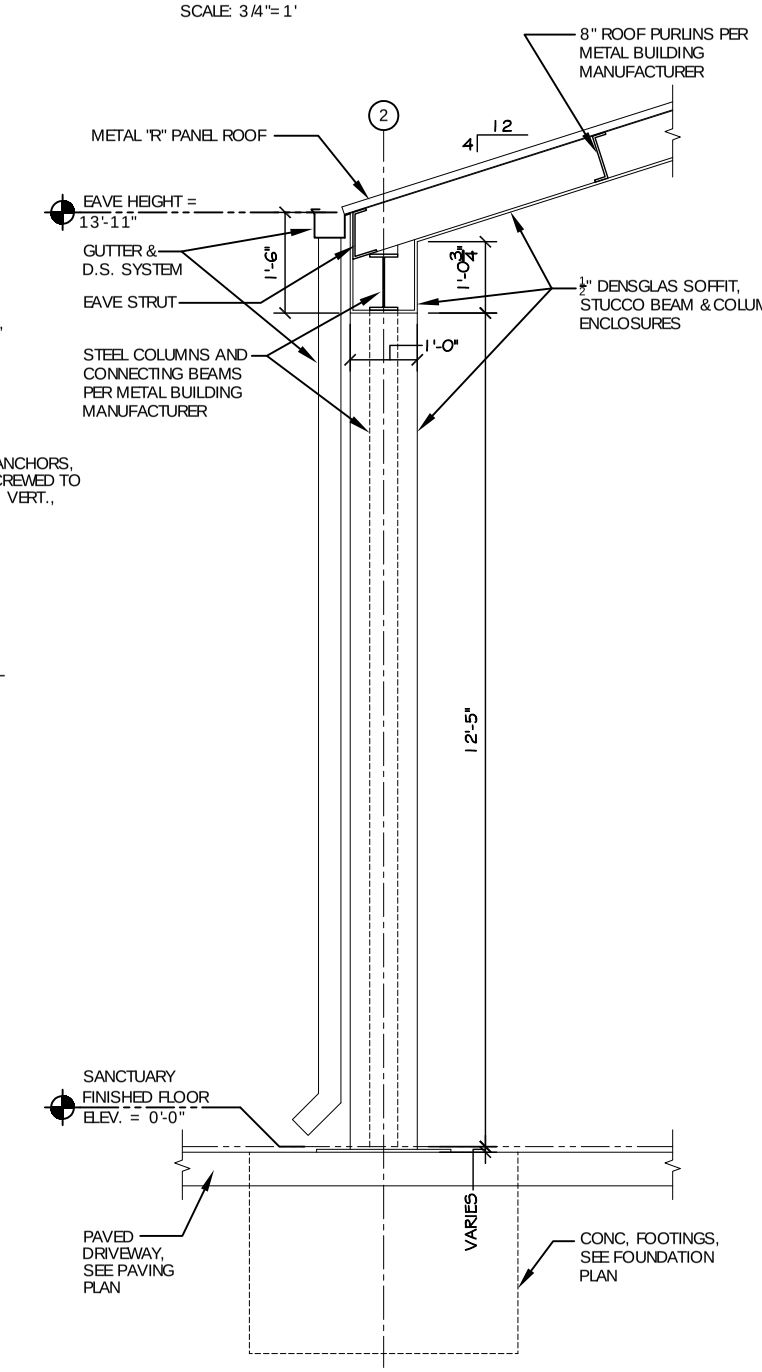

DRIVE-THRU CANOPY EAVE SECTION (K / A6.A5)
SCALE: 3/4"= 1'

DAMMON ENGINEERING, INC.

CHIEF ENGINEER
EMMETT DAMMON, P.E.

CHIEF ARCHITECT
ROBERT WILTSE

1095 FLORIDA AVENUE
SLIDELL, LA. 70458
OFFICE: 985-649-5832
FAX: 985-641-5950

WEBSITE:
WWW.DAMMONENGINEERING.COM

EMAIL:
DAMMONENG@BELLSOUTH.NET

ARCHITECTURE
ENGINEERING
STUDIES
PLANNING
INVESTIGATION
EXPERT WITNESS

NEW CHURCH

TABERNACLE BAPTIST CHURCH
2445 FOURTH ST.
SLIDELL, LA

WALL SECTIONS

REV: 4-21-10

SCALE: AS NOTED

JOB#: 2050

DATE: 2-8-10

SHEET 16

A-5

OF 25