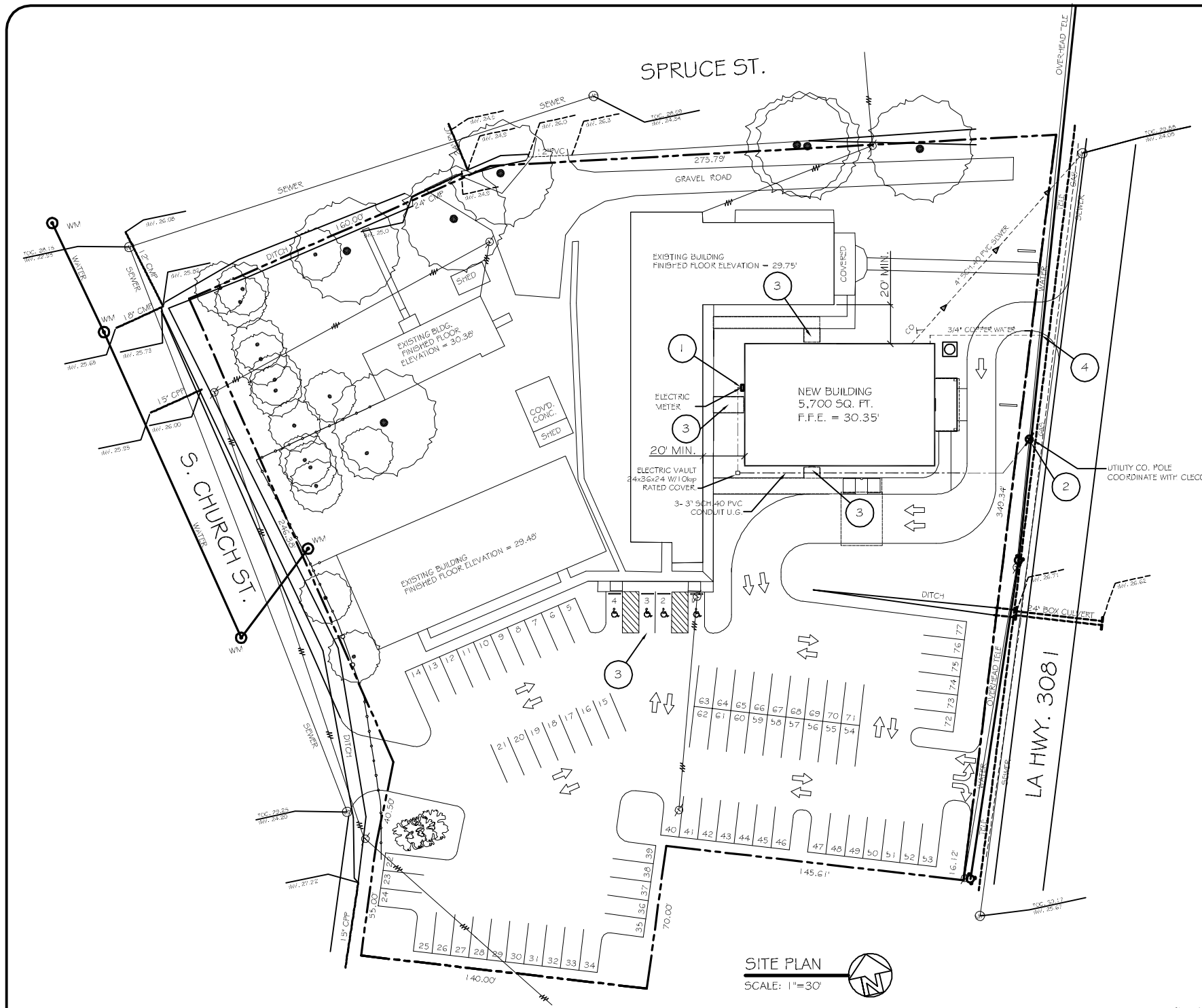

SITE PLAN

SCALE: 1"=30'

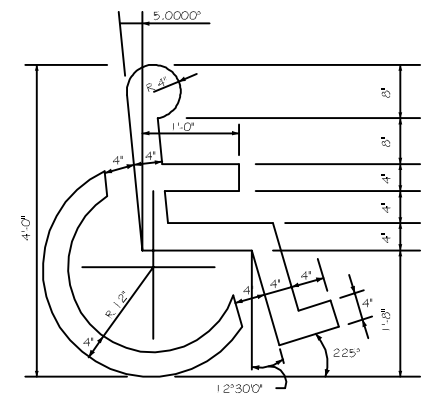

HANDICAP SYMBOL DETAIL

N. T. S.

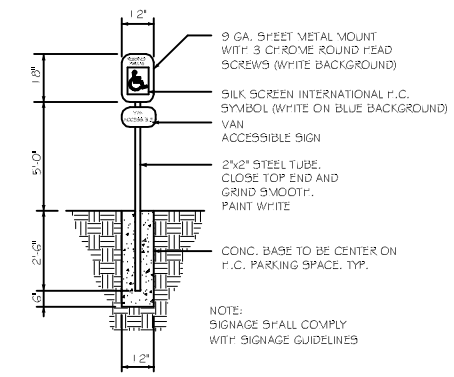

HANDICAP PARKING SIGN

N. T. S.

SITE NOTES: (#)

1. SCH. 80 PVC CONDUIT WHERE PIPE IS EXPOSED OUTSIDE OF BUILDING WALL. TRANSITION BACK TO SCH.40 PVC @ 90° PVC ELBOW BELOW GRADE. ALL 90° FITTINGS TO BE 36" LONG SWEEP TYPE.
2. TRANSITION OVERHEAD POWER TO U.G. SCH.40 PVC CONDUIT. COORDINATE WITH ELEC. COMPANY.
3. PROVIDE HANDICAP ACCESSIBLE LEVEL LANDINGS AT ALL EXTERIOR EXIT LOCATIONS NO MORE THAN 1/2" BELOW F.F.E. ENSURE THAT ALL HCP PARKING IS ACCESSIBLE BY FUTURE SIDEWALKS, RAMPS, ETC. THAT ARE NOT INCLUDED IN THIS SET OF PLANS.
4. TIE NEW WATER SERVICE INTO EXISTING WATER MAIN ON LA HWY. 3081. SEE DETAIL THIS SHEET

SITE LEGEND

- PROPERTY LINE
- BUILDING OUTLINE
- HANDICAP PARKING
- SEWER SERVICE LINE
- ELEC SERVICE CONDUIT

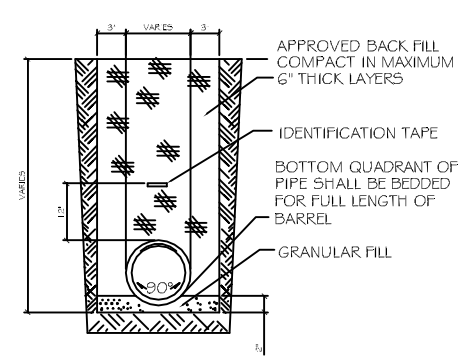

A MIN. 10 FT. HORIZONTAL AND 18" VERTICAL SEPARATION IS REQUIRED BETWEEN WATER & SEWER LINE.

DRAIN PIPE BEDDING

N.T.S.

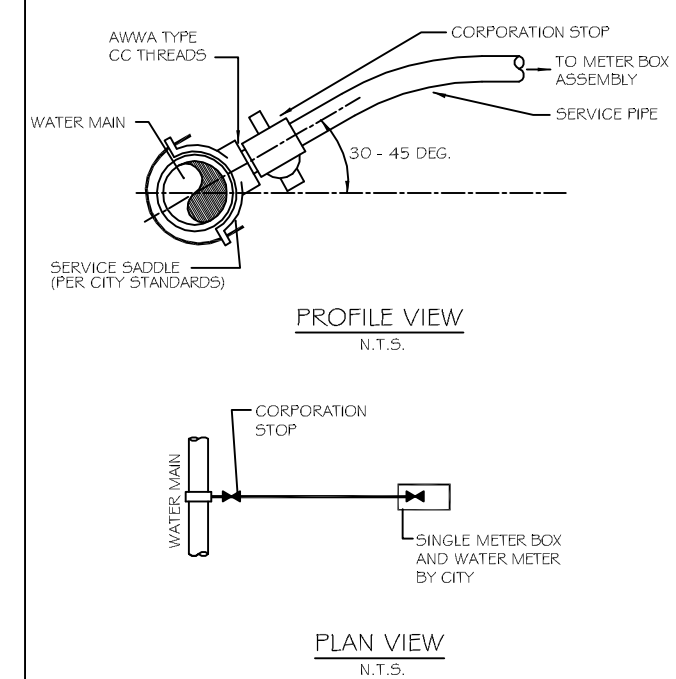

WATER SERVICE DETAIL

DAMMON ENGINEERING, INC.

CHIEF ENGINEER
EMMETT
DAMMON, P.E.

CHIEF ARCHITECT
ROBERT
WILTSE

554 OLD SPANISH TRAIL
SLIDELL, LA. 70458
OFFICE: 985-649-5832
FAX: 985-641-5950

WEBSITE:
WWW.DAMMONENGINEERING.COM

EMAIL:
DAMMONENG@BELLSOUTH.NET

ARCHITECTURE

ENGINEERING

STUDIES

PLANNING

INVESTIGATION

EXPERT WITNESS

NEW CHURCH

FIRST BAPTIST CHURCH
64541 HWY 3081
PEARL RIVER, LA
70452

SITE PLAN

REV:

SCALE: AS NOTED

JOB#: 2108

DATE: 04-26-11

SHEET 2

C-1

OF 14