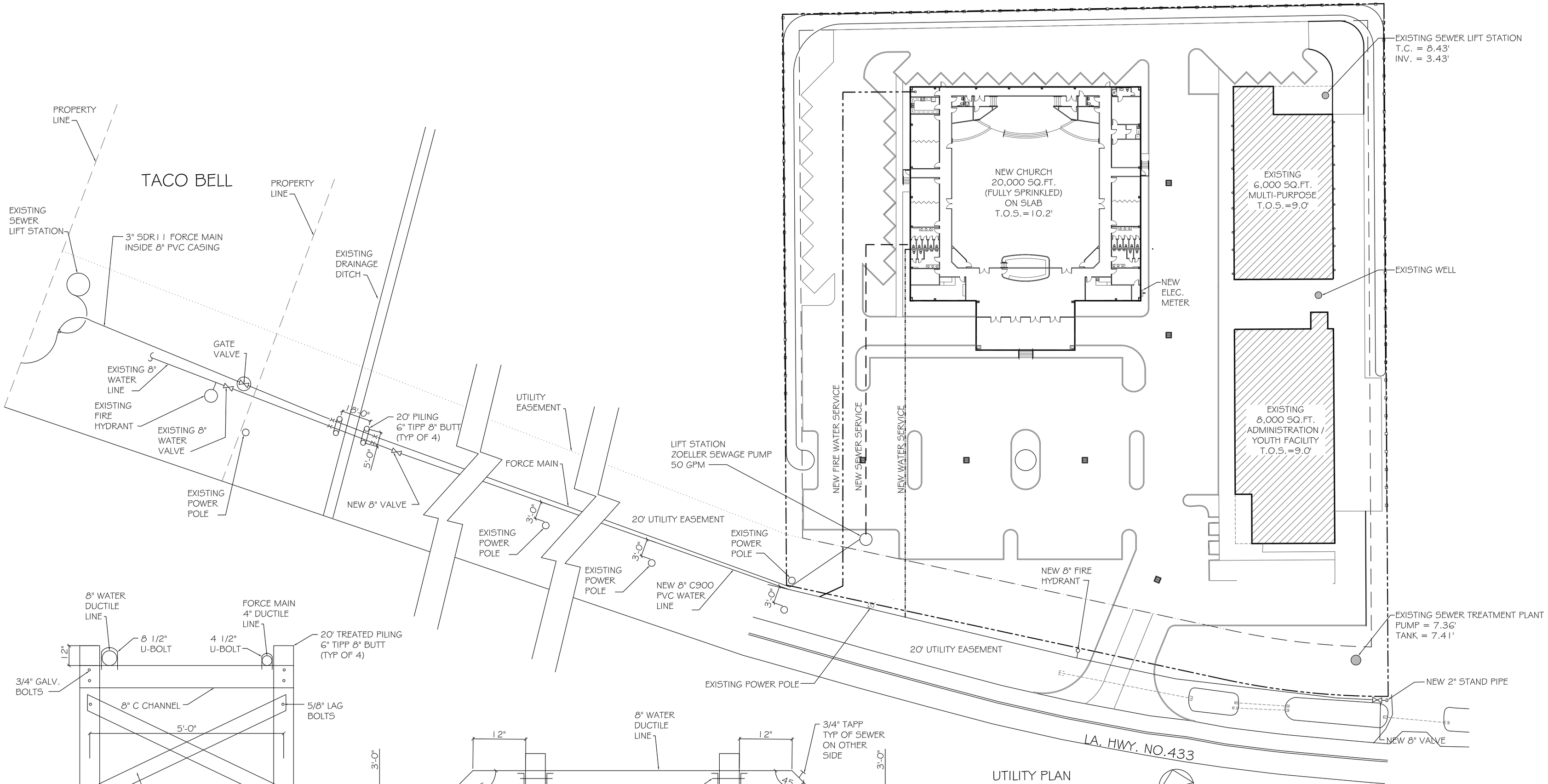

UTILITY PLAN

SCALE: 1"=30'-0"

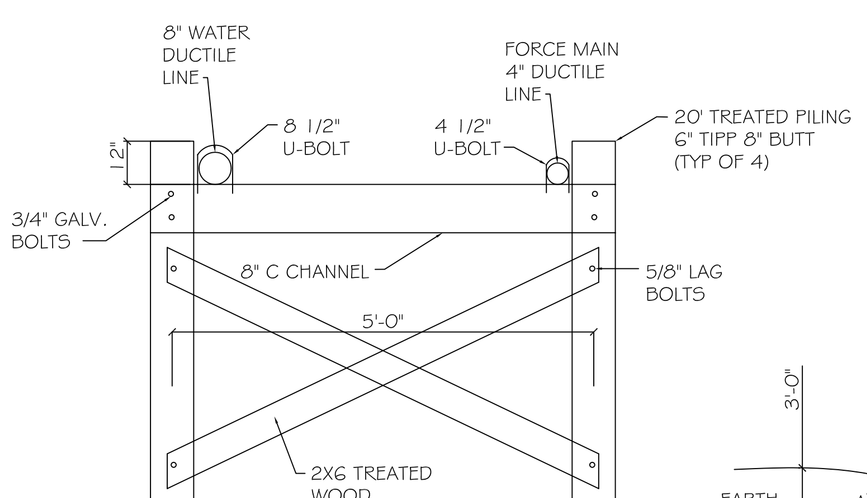

SECTION

SCALE: N.T.S.

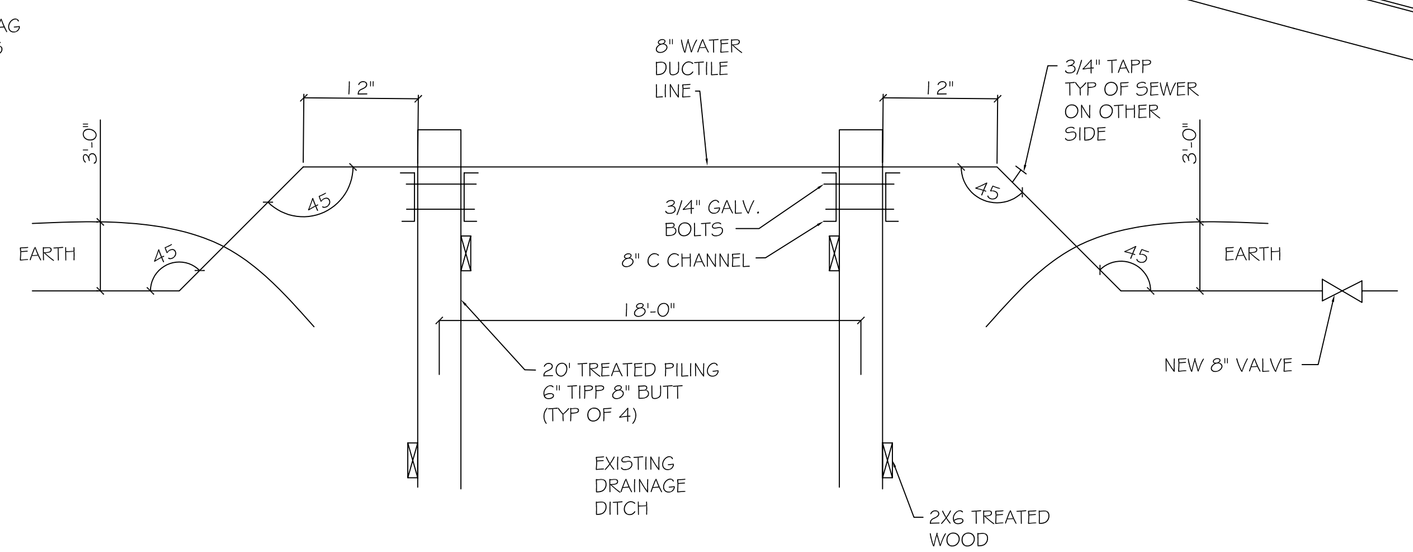

SECTION

SCALE: N.T.S.

UTILITY LEGEND

- PROPERTY LINE
- SETBACK LINE
- UTIL. EASEMENT LINE
- SEWER LINE
- WATER LINE
- U.G. ELEC. CONDUIT

DAMMON ENGINEERING, INC.

CHIEF ENGINEER
EMMETT
DAMMON, P.E.

CHIEF ARCHITECT
ROBERT
WILTSE

554 OLD SPANISH TRAIL
SLIDELL, LA. 70458
OFFICE: 985-649-5832
FAX: 985-641-5950

WEBSITE:
WWW.DAMMONENGINEERING.COM

EMAIL:
DAMMONENG@BELLSOUTH.NET

ARCHITECTURE

ENGINEERING

STUDIES

PLANNING

INVESTIGATION

EXPERT WITNESS

LIVING THE WORD INTERNATIONAL

2528
OLD SPANISH TRAIL
SLIDELL, LA
70461

SEWER & WATER PLAN

REV: 10-8-12

SCALE: AS NOTED

JOB#: 2128

DATE: 01-27-12

SHEET

C- 6 A

OF