PROJECT:	LIVING THE WORD INTERNATIONAL CHURCH

STORMWATER RUN-OFF CALCULATIONS

Formulas used:

[1] RATIONAL METHOD: Q=Aci

where:
- Q= Peak discharge of watershed in cubic feet per second (cfs) due to maximum storm assumed.
- A= Area of watershed in acres.
- c= Coefficient of run-off [2]
- i= Intensity of rainfall in inches per hour based on concentration time. [3]

[4] $$TC=\frac{\left(L^{0.8}\left(\frac{1000}{s}-9\right)^{0.7}\right)}{(1140(s^{0.5}))}$$

where:
- TC= Time of concentration= time required for rain falling at most remote point to reach discharge point.
- c= Site run-off coefficient based on conditions shown.
- s= Percent slope of overland flow

PRIOR DEVELOPMENT
100 Year Frequency

Q_1 = A ci

Watertight Surfaces		34371	sqft =	0.789	Acres
c(1) =	0.9				
Gravel Surface		99330	sqft =	2.280	Acres
c(2) =	0.25				
Green Space		8304.6	sqft =	0.191	Acres
c(3) =	0.15				
Summary		142005.6	sqft =	3.260	Acres
c =	0.40				

Duration (D) = Time of concentration (TC)

where	L =	500	run-off length ft	Elev diff = 3.4
	c =	0.40	run-off coef	
	S =	0.6800	percent slope	
therefore	TC = D =	24.82	minutes	
Expected rainfall intensity	i =	4.41	in/hr	

Q_1 = 5.772 cfs — 25% reduction 1.443 cfs

POST DEVELOPMENT
100 Year Frequency

Q_2 = A ci

Watertight Surfaces		101851	sqft =	2.338	Acres
c(1) =	0.9				
Gravel Surface		6025	sqft =	0.138	Acres
c(2) =	0.25				
Green Space		34129.6	sqft =	0.784	Acres
c(3) =	0.15				
Summary		142005.6	sqft =	3.260	Acres
c =	0.69				

Duration (D) = Time of concentration (TC)

where	L =	750	run-off length ft	Elev diff = 3.3
	c =	0.69	run-off coef	
	S =	0.4400	percent slope	
therefore	TC = D =	18.83	minutes	
Expected rainfall intensity	i =	4.41	in/hr	

Q_2 = 9.961 cfs

DETENTION REQUIREMENTS

Detention required Q1-Q2+ 25Q1 =	7.46	cfs	
ONE HOUR DETENTION	26889.6	cuft	
DETENTION DIMENSIONS	WIDTH	60	feet
	LENGTH	240	feet
	DEPTH	1.41	feet

DISCHARGE END AREA REQUIREMENTS
100 Year Frequency

[5] $$A=\frac{Q}{(c\sqrt{(2gh)})}$$

where:
- A= Discharge Area required
- g= Acceleration of gravity
- c= Discharge coefficient
- h= Hydraulic head
- Q= Flow volume from run-off

Pipe Servicing Site Drainage

Q =	5.622	cfs	h =	3.30	feet
c =	0.62	coefficient	A =	0.622	sqft
g =	32.16	ft/sec^2	D =	0.890	ft

REQUIRED CONDUIT = 10.68 inch inside diameter Use 12" PVC

References:
1. Chen, W.F. The Civil Engineering Handbook. 1995. Eq# 31.1, pg. 1036
2. Seelye, Elwyn E. Data Book for Civil Engineers, Vol.1 1960. Tbl. B, pg. 18-02
3. Seelye, Elwyn E. Data Book for Civil Engineers, Vol.1 1960. Fig B, pg. 18-01
4. Chen, W.F. The Civil Engineering Handbook. 1995. Tbl. 31.2 Regan Equation (n=0.013)
5. Chen, W.F. The Civil Engineering Handbook. 1995. Eq# 28.32, pg. 969

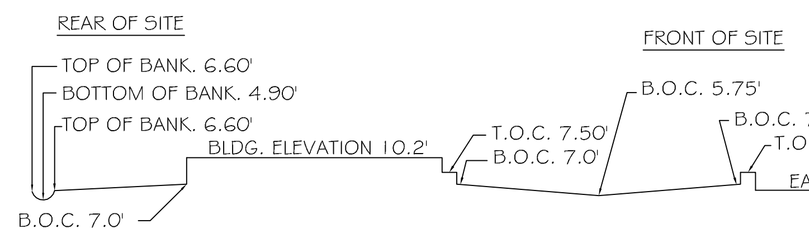

SECTION
N.T.S.

DRAINAGE PLAN NOTES:

1. DRAIN PIPE & FITTINGS WITHIN PROPERTY LINE SHALL BE POLYVINYL CHLORIDE PLASTIC PIPE, MEETING CLASS 100 C-900 PVC.
2. ELEVATIONS SHOWN ARE M.S.L.
3. FIELD VERIFY ALL ELEVATIONS AND DRAINAGE SYSTEM PLACEMENT PRIOR TO START OF WORK.
4. THERE IS NO EVIDENCE OF EXISTING OFF-SITE FLOW CROSSING THE PROPERTY.

RELOCATE EXISTING POND TO ALLOW FOR PARKING LOT. EXISTING POND'S DIMENSION ARE 145' X 34'. THE RELOATED POND SHALL BE 170' X 39' AND MAINTAIN IT'S CURRENT CAPACITY.

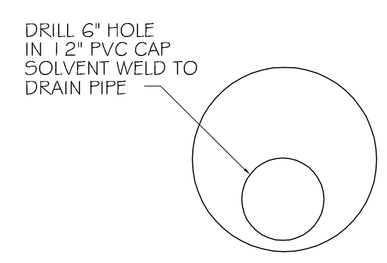

ORIFICE DETAIL
N.T.S.

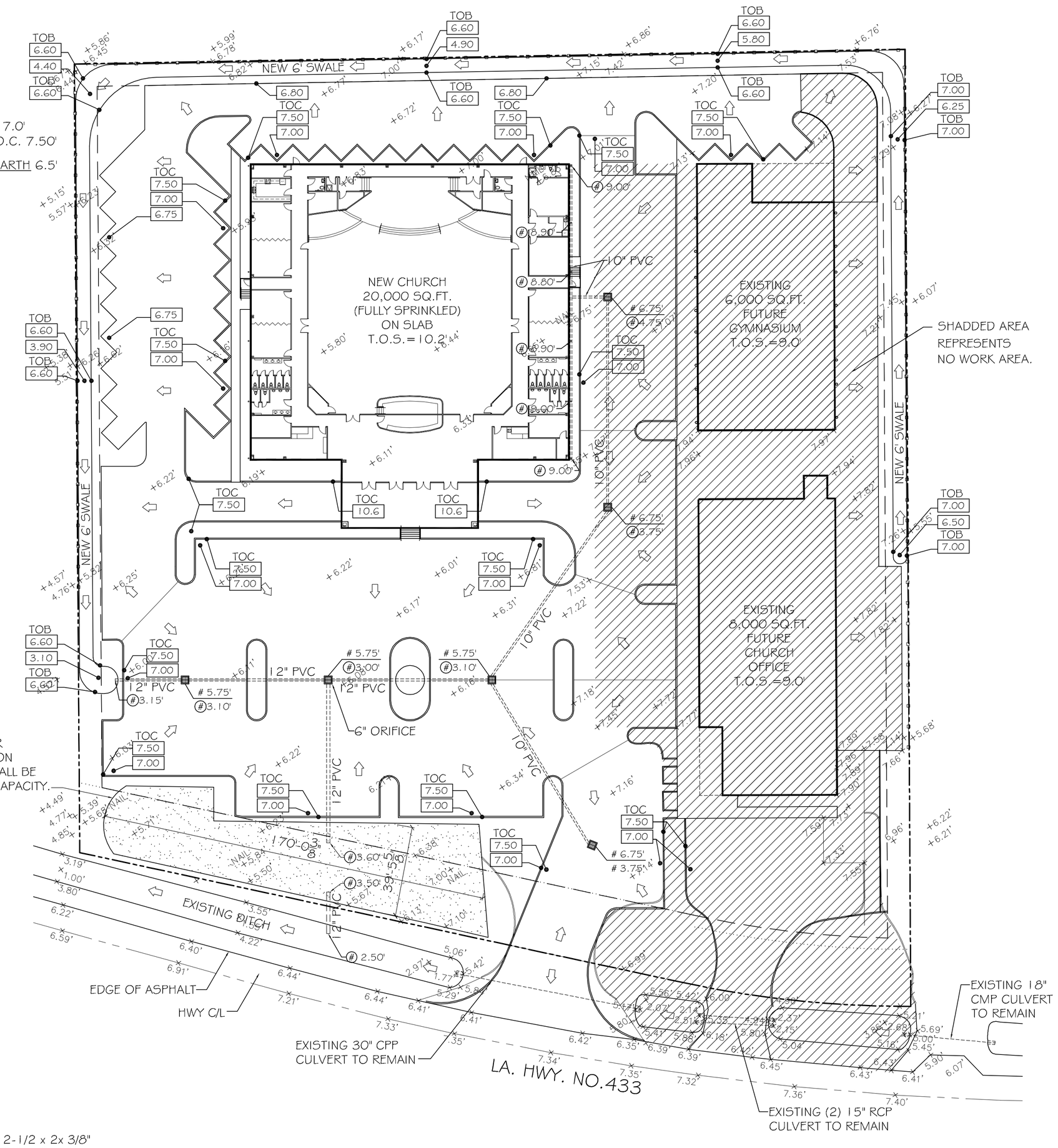

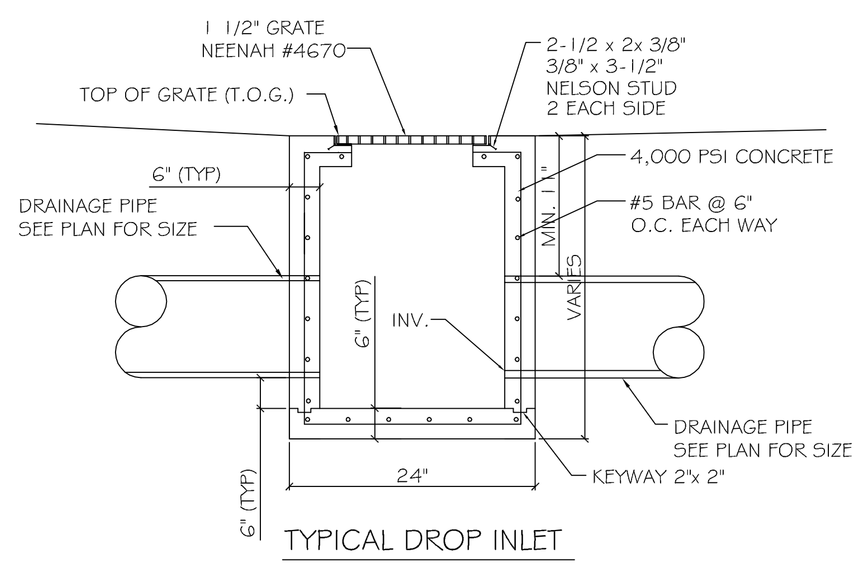

TYPICAL DROP INLET
N.T.S.

DRAINAGE PLAN
SCALE: 1"=30'-0"

LEGEND

- PROPERTY LINE
- SETBACK LINE
- SHEET FLOW ARROW
- (#)0.00' - INVERT ELEVATION
- # 0.00' - TOP OF GRATE ELEVATION
- 00.00 - NEW ELEVATION

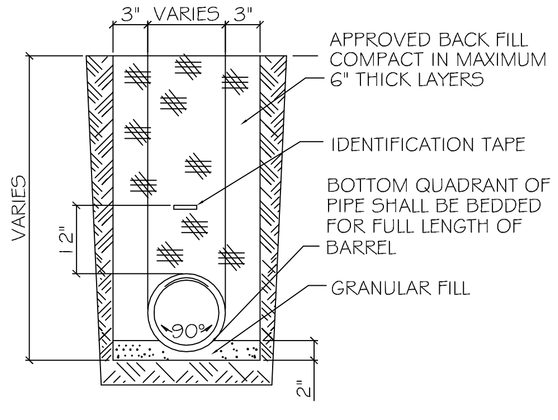

DRAIN PIPE BEDDING
N.T.S.

DAMMON
ENGINEERING, INC.

CHIEF ENGINEER
EMMETT
DAMMON, P.E.

CHIEF ARCHITECT
ROBERT
WILTSE

554 OLD SPANISH TRAIL
SLIDELL, LA. 70458
OFFICE: 985-649-5832
FAX: 985-641-5950

WEBSITE:
WWW.DAMMONENGINEERING.COM

EMAIL:
DAMMONENG@BELLSOUTH.NET

ARCHITECTURE

ENGINEERING

STUDIES

PLANNING

INVESTIGATION

EXPERT WITNESS

LIVING THE WORD INTERNATIONAL

2528
OLD SPANISH TRAIL
SLIDELL, LA
70461

DRAINAGE PLAN

REV:

SCALE: AS NOTED

JOB#: 2128

DATE: 01-27-12

SHEET 6

C-5

OF 21