PROJECT:	LIVING THE WORD INTERNATIONAL CHURCH

STORMWATER RUN-OFF CALCULATIONS

Formulas used:

[1] RATIONAL METHOD: Q=Aci

where:
- Q= Peak discharge of watershed in cubic feet per second (cfs) due to maximum storm assumed.
- A= Area of watershed in acres.
- c= Coefficient of run-off [2].
- i= Intensity of rainfall in inches per hour based on concentration time. [3]

[4] $TC = \dfrac{\left(L^{0.8}\left(\frac{1000}{s}-9\right)^{0.7}\right)}{(1140(s^{0.5}))}$

where:
- TC= Time of concentration= time required for rain falling at most remote point to reach discharge point.
- c= Site run-off coefficient based on conditions shown.
- s= Percent slope of overland flow.

PRIOR DEVELOPMENT
100 Year Frequency

Q_1 = A ci

Watertight Surfaces	c(1) = 0.9	34371	sqft =	0.789	Acres
Gravel Surface	c(2) = 0.25	99330	sqft =	2.280	Acres
Green Space	c(3) = 0.15	8304.6	sqft =	0.191	Acres
Summary	c = 0.40	142005.6	sqft =	3.260	Acres

Duration (D) = Time of concentration (TC)

where	L = 500	run-off length ft	Elev diff =	3.4
	c = 0.40	run-off coef		
	S = 0.6800	percent slope		
therefore	TC = D = 24.82	minutes		
Expected rainfall intensity	i = 4.41	in/hr		
Q_1 =	5.772 cfs	25% reduction	1.443 cfs	

POST DEVELOPMENT
100 Year Frequency

Q_2 = A ci

Watertight Surfaces	c(1) = 0.9	101851	sqft =	2.338	Acres
Gravel Surface	c(2) = 0.25	6025	sqft =	0.138	Acres
Green Space	c(3) = 0.15	34129.6	sqft =	0.784	Acres
Summary	c = 0.69	142005.6	sqft =	3.260	Acres

Duration (D) = Time of concentration (TC)

where	L = 750	run-off length ft	Elev diff =	3.3
	c = 0.69	run-off coef		
	S = 0.4400	percent slope		
therefore	TC = D = 18.83	minutes		
Expected rainfall intensity	i = 4.41	in/hr		
Q_2 =	9.961 cfs			

DETENTION REQUIREMENTS

Detention required Q1-Q2+ 25Q1 =	7.46 cfs		
ONE HOUR DETENTION	0029.9 cuft		
DETENTION DIMENSIONS		WIDTH	60 feet
		LENGTH	240 feet
		DEPTH	1.41 feet

DISCHARGE END AREA REQUIREMENTS
100 Year Frequency

[5] $A = \dfrac{Q}{(c\sqrt{(2gh)})}$

where:
- A= Discharge Area required
- g= Acceleration of gravity
- c= Discharge coefficient
- h= Hydraulic head
- Q= Flow volume from run-off

Pipe Servicing Site Drainage

Q =	5.622 cfs	h =	3.30 feet	
c =	0.62 coefficient	A =	0.622 sqft	
g =	32.16 ft/sec^2	D =	0.890 ft	

REQUIRED CONDUIT = 10.68 inch inside diameter Use 12" PVC

References:
1. Chen, W.F. The Civil Engineering Handbook, 1995. Eq# 31.1, pg. 1036
2. Seelye, Elwyn E. Data Book for Civil Engineers, Vol.1 1960. Tbl. B, pg. 18-02
3. Seelye, Elwyn E. Data Book for Civil Engineers, Vol.1 1960. Fig B, pg. 18-01
4. Chen, W.F. The Civil Engineering Handbook, 1995. Tbl. 31.2 Regan Equation (n=0.013)
5. Chen, W.F. The Civil Engineering Handbook, 1995. Eq# 28.32, pg. 969

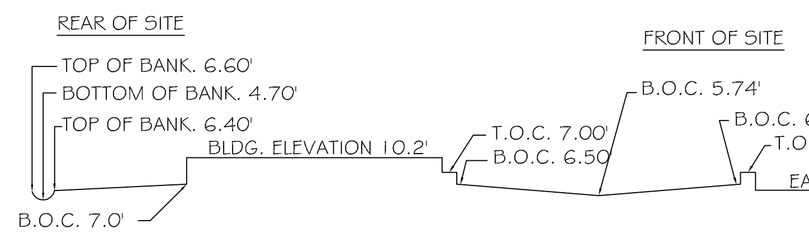

SECTION
N.T.S.

DRAINAGE PLAN NOTES:

1. DRAIN PIPE & FITTINGS WITHIN PROPERTY LINE SHALL BE POLYVINYL CHLORIDE PLASTIC PIPE, MEETING CLASS 100 C-900 PVC.
2. ELEVATIONS SHOWN ARE M.S.L.
3. FIELD VERIFY ALL ELEVATIONS AND DRAINAGE SYSTEM PLACEMENT PRIOR TO START OF WORK.
4. THERE IS NO EVIDENCE OF EXISTING OFF-SITE FLOW CROSSING THE PROPERTY.

RELOCATE EXISTING POND TO ALLOW FOR PARKING LOT. EXISTING POND'S DIMENSION ARE 145' X 34'. THE RELOATED POND SHALL BE 170' X 39' AND MAINTAIN IT'S CURRENT DEPTH CAPACITY OF 3.00'.

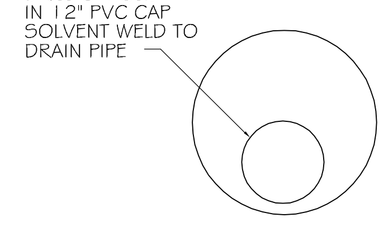

ORIFICE DETAIL
N.T.S.

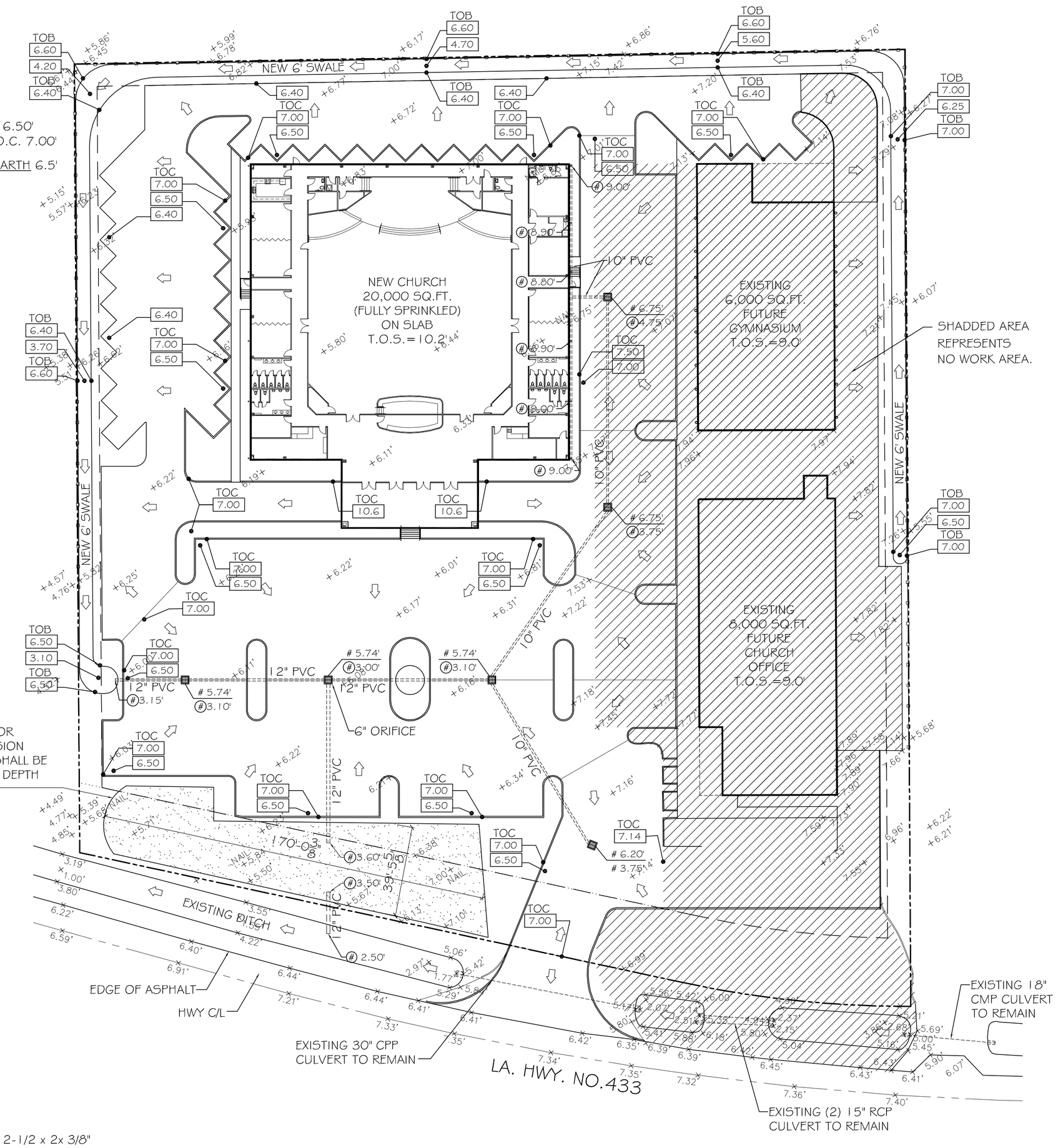

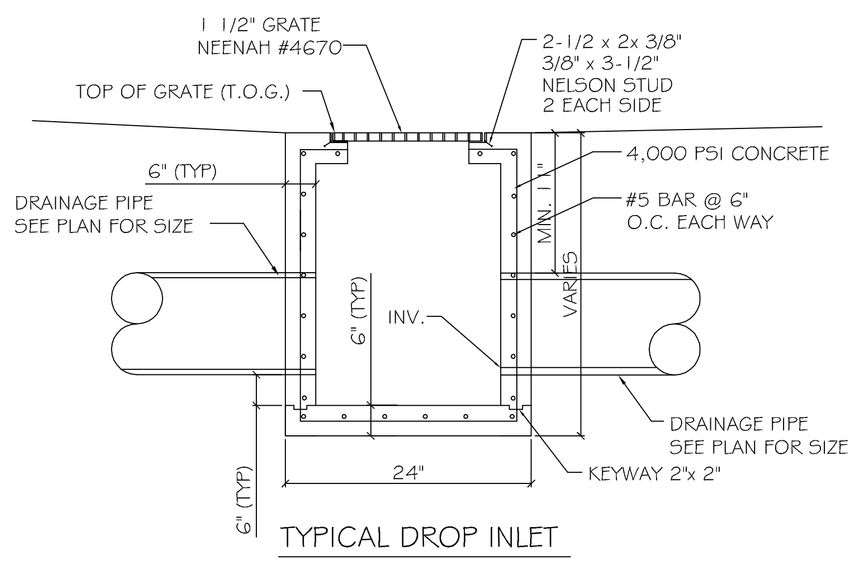

TYPICAL DROP INLET
N.T.S.

DRAINAGE PLAN
SCALE: 1"=30'-0"

LEGEND

- PROPERTY LINE
- SETBACK LINE
- SHEET FLOW ARROW
- (#)0.00' - INVERT ELEVATION
- # 0.00' - TOP OF GRATE ELEVATION
- 00.00 - NEW ELEVATION

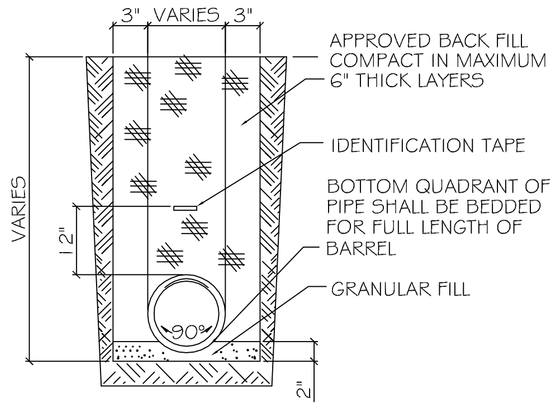

DRAIN PIPE BEDDING
N.T.S.

DAMMON
ENGINEERING, INC.

CHIEF ENGINEER
EMMETT
DAMMON, P.E.

CHIEF ARCHITECT
ROBERT
WILTSE

554 OLD SPANISH TRAIL
SLIDELL, LA. 70458
OFFICE: 985-649-5832
FAX: 985-641-5950

WEBSITE:
WWW.DAMMONENGINEERING.COM

EMAIL:
DAMMONENG@BELLSOUTH.NET

ARCHITECTURE

ENGINEERING

STUDIES

PLANNING

INVESTIGATION

EXPERT WITNESS

LIVING THE WORD
INTERNATIONAL

2528
OLD SPANISH TRAIL
SLIDELL, LA
70461

DRAINAGE
PLAN

REV:

SCALE: AS NOTED

JOB#: 2128

DATE: 01-27-12

SHEET 6

C-5

OF 21