RATLEY ARCHITECTS
A Professional Architectural Corporation
Stephen C. Ratley, Architect
73279 Allen Road
Abita Springs, LA 70420
voice: 985.867.9509
mobil: 985.630.9682
ratleyarchitects @ att.net

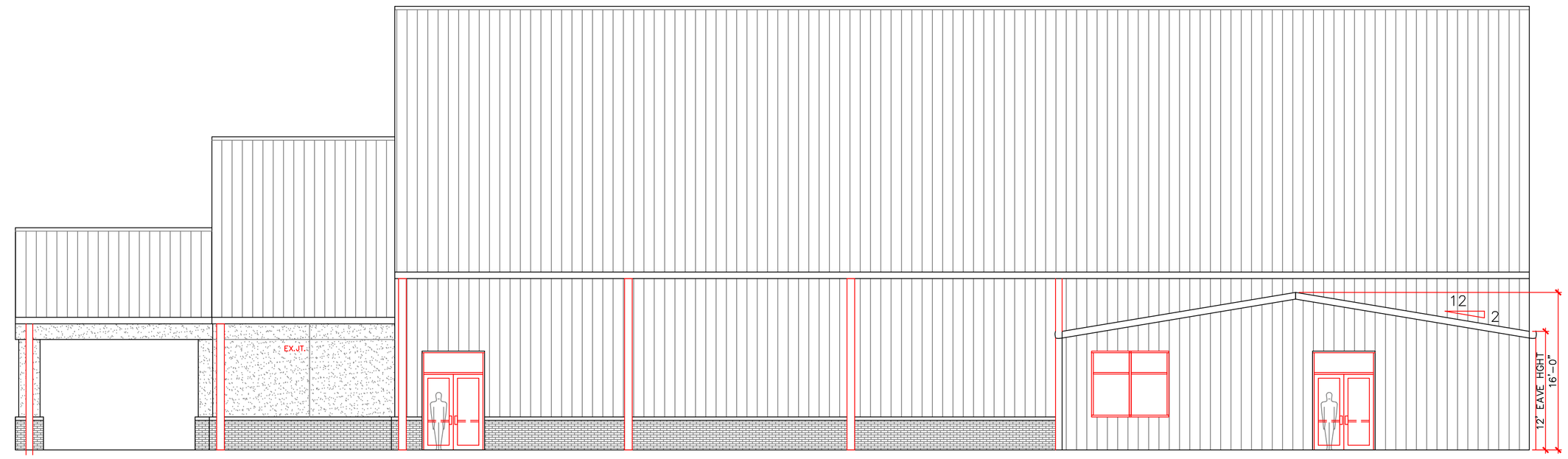

1 A-4 SOUTH BUILDING ELEVATION
1/8"=1'-0"

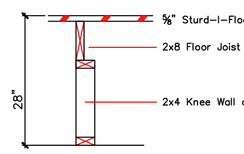

Note: All Wood Floor components shall be Fire Retardent Treated Wood.

8 A-4 PLATFORM FRAMING DETAIL
N.T.S.

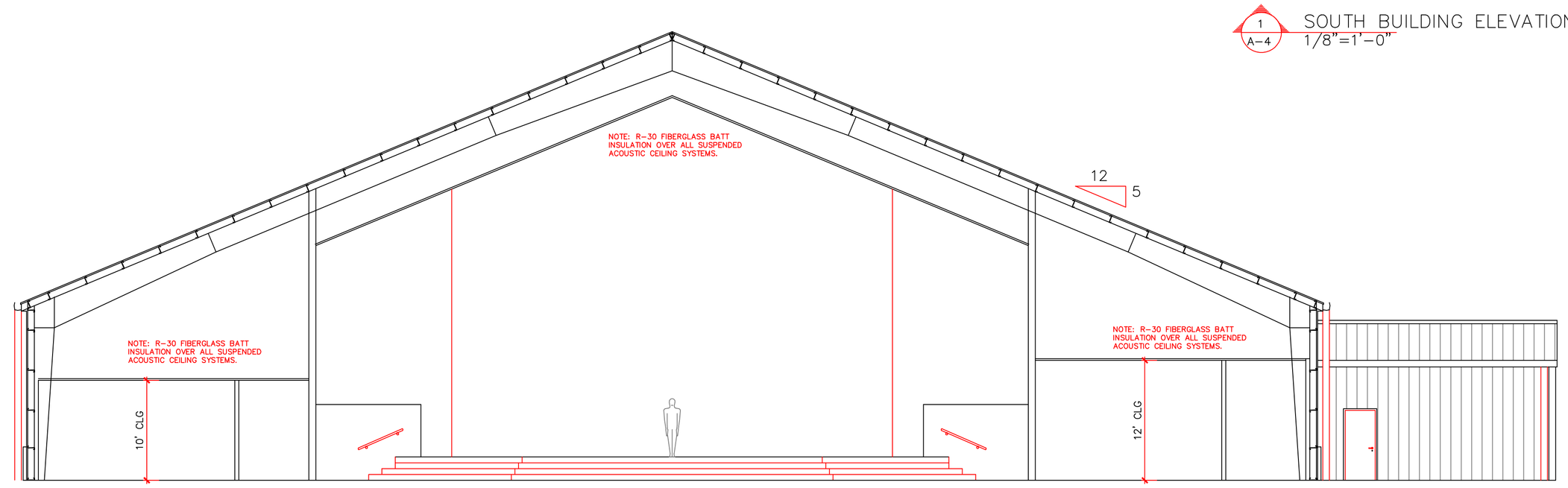

2 A-4 BUILDING SECTION
1/8"=1'-0"

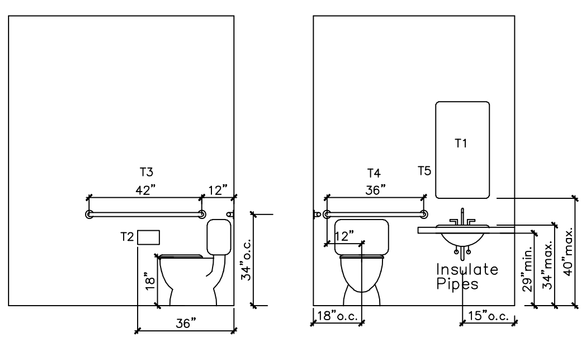

7 A-4 ADA RESTROOM DETAILS
N.T.S.

Toilet Compartments: Floor-anchored, plastic laminate clad panel, pilasters and doors with clear anodic aluminum hardware. Standard doors 24" wide in-swing and 36" wide out-swing with 32" min. clear opening for ADA accessible compartments. Install rigid, straight, level and plumb with ⅛"max. btwn panels and 1"max btwn panels and wall. Provide all trim for a complete installation.

Mount all toilet accessories at the manufacturer's recommended mounting heights and in compliance with all local and national accessibility requirements.

Provide treated wood blocking in walls for mounting of all toilet accessories as recommended by the manufacturer.

A New Facility for
1st Baptist Church Lacombe
62060 La Hwy 434
Lacombe, Louisiana 70445-3260
St. Tammany Parish

19.9.2013	2009-07
FOR REVIEW	FBCL6.dwg

A-4