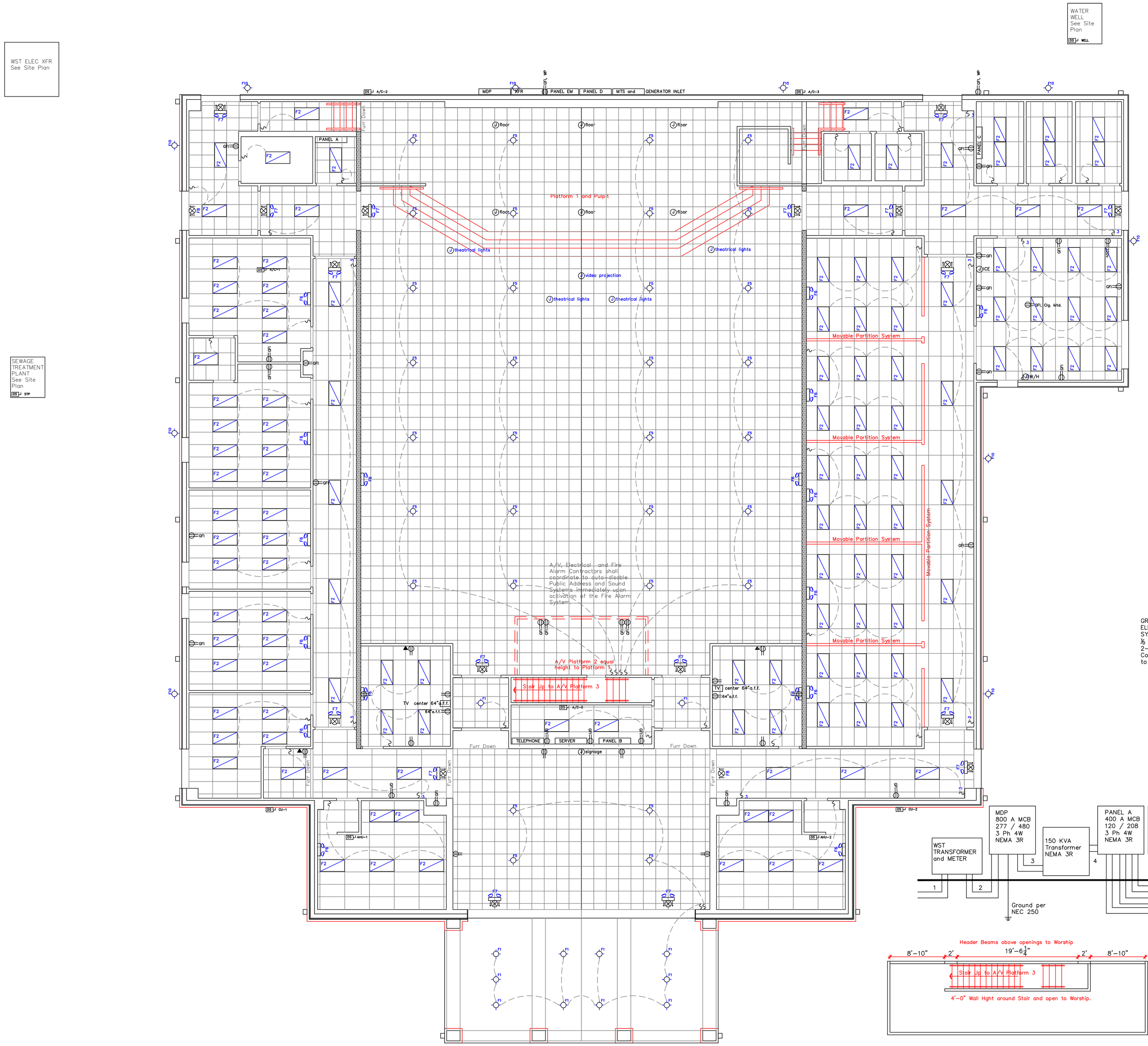

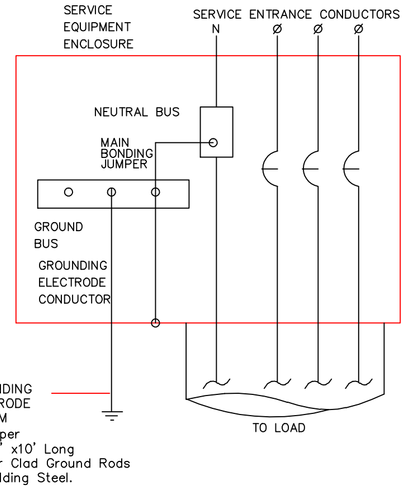

3 E-1 GROUNDING / BONDING DIAGRAM
Not to Scale

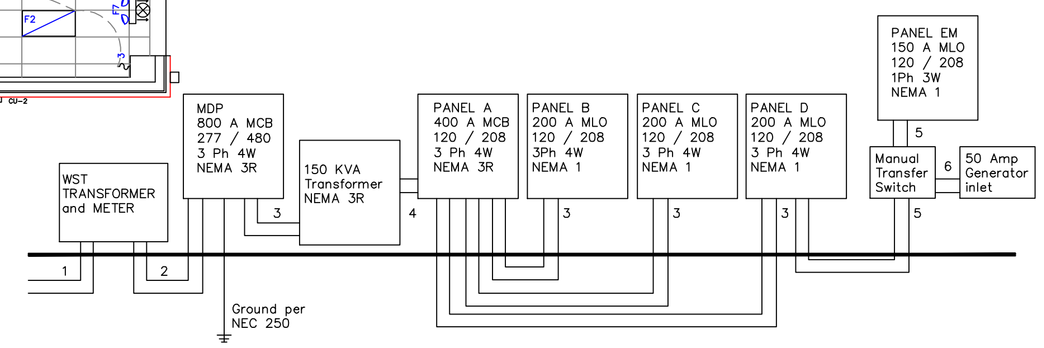

1. (2) 4" Conduit with pullstring.
2. (2) 4" C, (4) #500 MCM.
3. 2" C, (4) ⅜ (1) #6.
4. 4" C. (4) 500 (1) #3.
5. 1–1/2 C. (3) ⅝ (1) #6.
6. 1" C. (3) #6 (1) # 10.

2 E-1 ELECTRIC RISER DIAGRAM
Not to Scale

1 E-1 LIGHTING/ELECTRICAL FLOOR PLAN
1/8"=1'–0"

Plan North

RATLEY ARCHITECTS
A Professional Architectural Corporation

Stephen C. Ratley, Architect
73279 Allen Road
Abita Springs, LA 70420
voice: 985.867.9509
mobil: 985.630.9682
ratleyarchitects @ att.net

ELECTRICAL SYMBOLS AND NOTES

PANEL P1	Circuit Breaker Panel
	Toggle Switch (48"a.f.f. or as noted)
3	3–Way Toggle Switch (48"a.f.f. or as noted)
GFI	Ground Fault Interrupt Protected Duplex Outlet, Circuit (18"a.f.f. or as noted)
J	Junction Box
DS	Equipment Disconnect Switch
▼	Data/Tele Connection Coordinate Requirements with Owner
F1	Downlight DCO CR1 IC 150W max Edison Base RB30W WHITE BAFFEL WHITE TRIM RING CFL
F2	2x4 Flourescent Lay–in Lensed Troffer Type, DAYBRITE DCO 2TG8232–12 UNV–1/2 EB
F3	Up Lighting Flood SPI EEK200S–11250–PW–120–PT46 1 Lamp 250w Tungsten Halogen Verify wall mounting height with architect
F4	Wall Mounted Accent Light OXYGEN SKYLINE 2–5131–14 1x 14W T5 Flourescent mini bi–pin Mount above mirrors and drinking fountains
F5	Decorative Pendant Savannah AIP8112 6 lamp–50W BIAXIAL CFL Alladdin Light Lift ALL200 (verify)
F6	Emergency Light DCO–MCPHILBIN VU6 WHITE Route to nearest lighting circuit ahead of switching
F7	Combined Exit and Emergency Light MCPHILBEN VCRW White Housing/Red Letter Route to nearest lighting circuit ahead of switching
F8	Exit Light DCO–MCPHILBIN VERWEN WHITE Route to nearest lighting circuit ahead of switching
F9	Exterior Pole Mounted Area Light (2) AVALUME AVA–2–3/T–250PSMH–QUAD–NP (1) LYTE POLE 101–5007–30–D2@180–NAT ALUM 14"ø x36d Concrete Base (see detail) photo cell control
F10	Compact Flourescent Wall Pack Security light Daybrite WLB32CFU–BDL940/E Photo cell control

Comply with NFPA 70, National Electrical Code, Latest Edition for all work of this project, and coordinate with requirements of local electric utility company to verify availability of service required.
Electrical Contractor shall verify size and electical characteristics of all equipment prior to purchasing of electrical materials and prior to installing feeders and disconnects.
Install two ¾" x 10' copper clad ground rods six feet apart and connect with a # 2 /0 copper conductor unbroken to both rods, disconnect switches and steel building frame.
Route exterior lighting fixtures through a lighting contactor bank adjacent to electrical breaker panels and provide manual override through use of HOA switch.
All fixtures, wiring, panels and equipment shall be U.L. listed.
All conductors shall be copper, minimum size no. 12 except for fixture drops and control circuits of equipment.
Mechanical equipment shall be wored to and connected by Electrical Contractor, contol woring shall be by HVAC Contractor.
Main feeders shall be installed in galvanized or sheradized conduit. Branch circuits shall be run in EMT or as approved by NFPA 70. Wiring devices shall be commercial specification grade as manufactured by General Electric of Leviton or equal.
Provide minimum ¾" conduit to equipment, unless otherwise required.
Place signage at each Service Entrance indicating the type and location of any on–site emergency source in accord with NFPA 70;700–8a.
Service equipment grounding and bonding shall be in accord with NFPA 70:230–63, 250–23, 250–53b, 250–71 and 250–81.
The grounding neutral conductor shall be run to each service disconnecting means enclosure and shall be bonded to each in accord with NFPA 70:250–23b.
Provide bonding of other enclosures in accord with NFPA 70:250–75.
A disconnect is required for a permanently connected appliance in accord with NFPA 70;422–21b.
Electrical motors for compressors, pumps, exhaust fans or ventilation fans shall have motor overload and short circuit protection in accord with NFPA 70:430.
A disconnecting means shall be located in sight from the motor location in accord with NFPA 70:430–14.
Service equipment and each panel board, circuit breaker and fused switch shall have adequate interrupting amp rating for available short circuit amps that must be interrupted in accord with NFPA 70;210–8b.
Receptacles and outlets in restroom of commercial, industrial and all other non–dwelling occupancies shall provide ground–fault circuit–interrupter protection for personnel.
Receptacles and outlets in commercial garage areas, or where electrical diagnostic equipment, electrical hand tools, or portable lighting devices are used shall provide ground–fault circuit–interrupter protection for personnel in accord with NFPA 70:511–10.

A New Facility for 1st Baptist Church Lacombe
62060 La Hwy 434
Lacombe, Louisiana 70445–3260
St. Tammany Parish

19.9.2013	2009–07
FOR REVIEW	FBCL6.dwg

E-1