1) REMOVE AND REPLACE TWO (2) VENTS
2) REMOVE AND REPLACE 66 LF RAKE TRIM
3) REMOVE AND REPLACE 12 LF GUTTER
4) REMOVE AND REPLACE 10 SQ. VINYL INSULATION
5) REMOVEAND REPLACE 11.31 SQ. R-PANEL

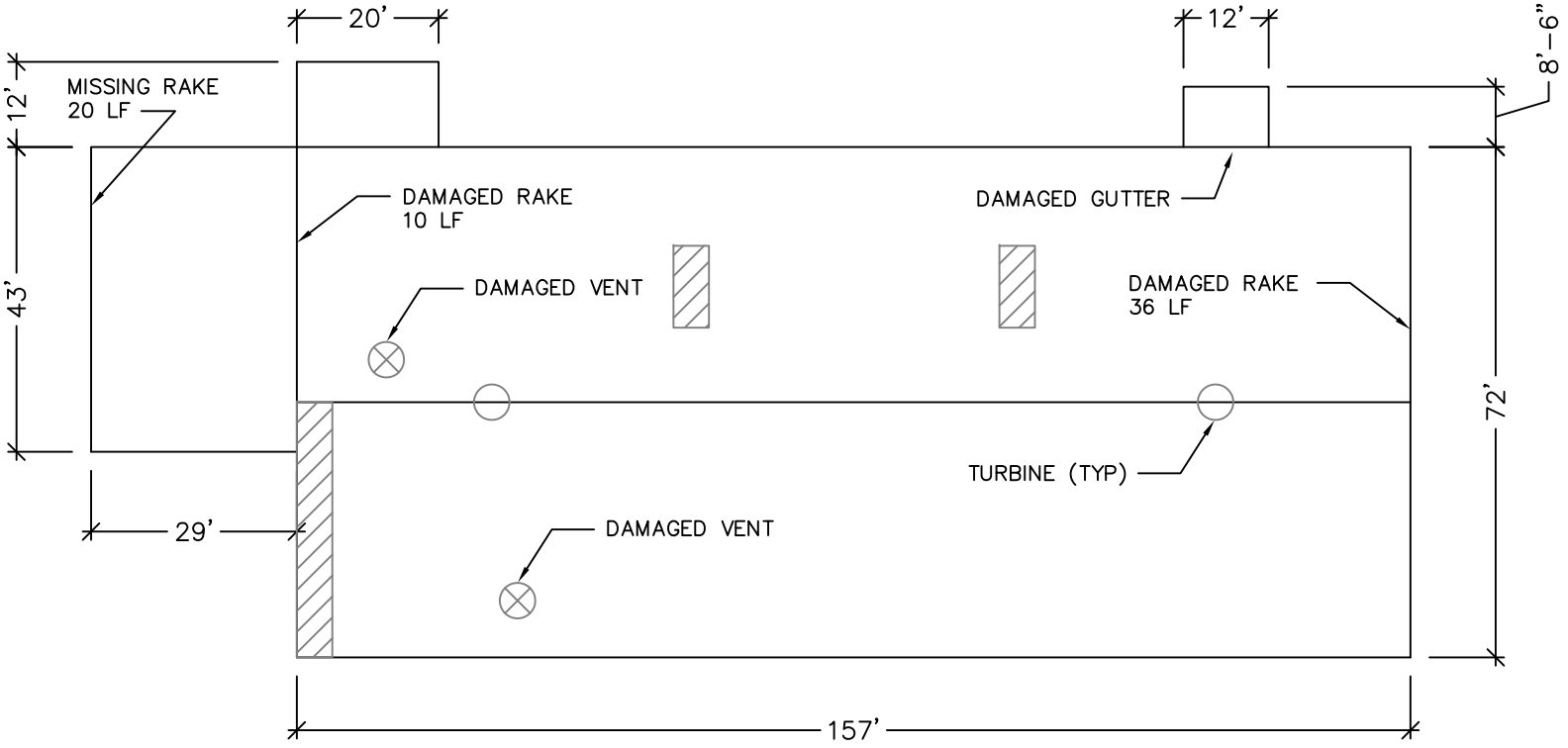

ITEM # MECO BUILDING 2 ROOF PLAN

SCALE: N.T.S.

NORTH

AI

AADJUSTER'S INTERNATIONAL
17130 N. DALLAS PKWY
SUITE 210
DALLAS, TEXAS 75248
www.ai-texas.com

PROJECT NAME

ITEM # MECO BUILDING 2
ROOF PLAN
NEW ORLEANS, LOUISIANA

REVISIONS

NOTICE

DRAWN BY D.W.

CHECKED BY L.S.

DATE 02 MARCH 2008

PROJECT NUMBER ITEM #

SHEET NAME

A1.01