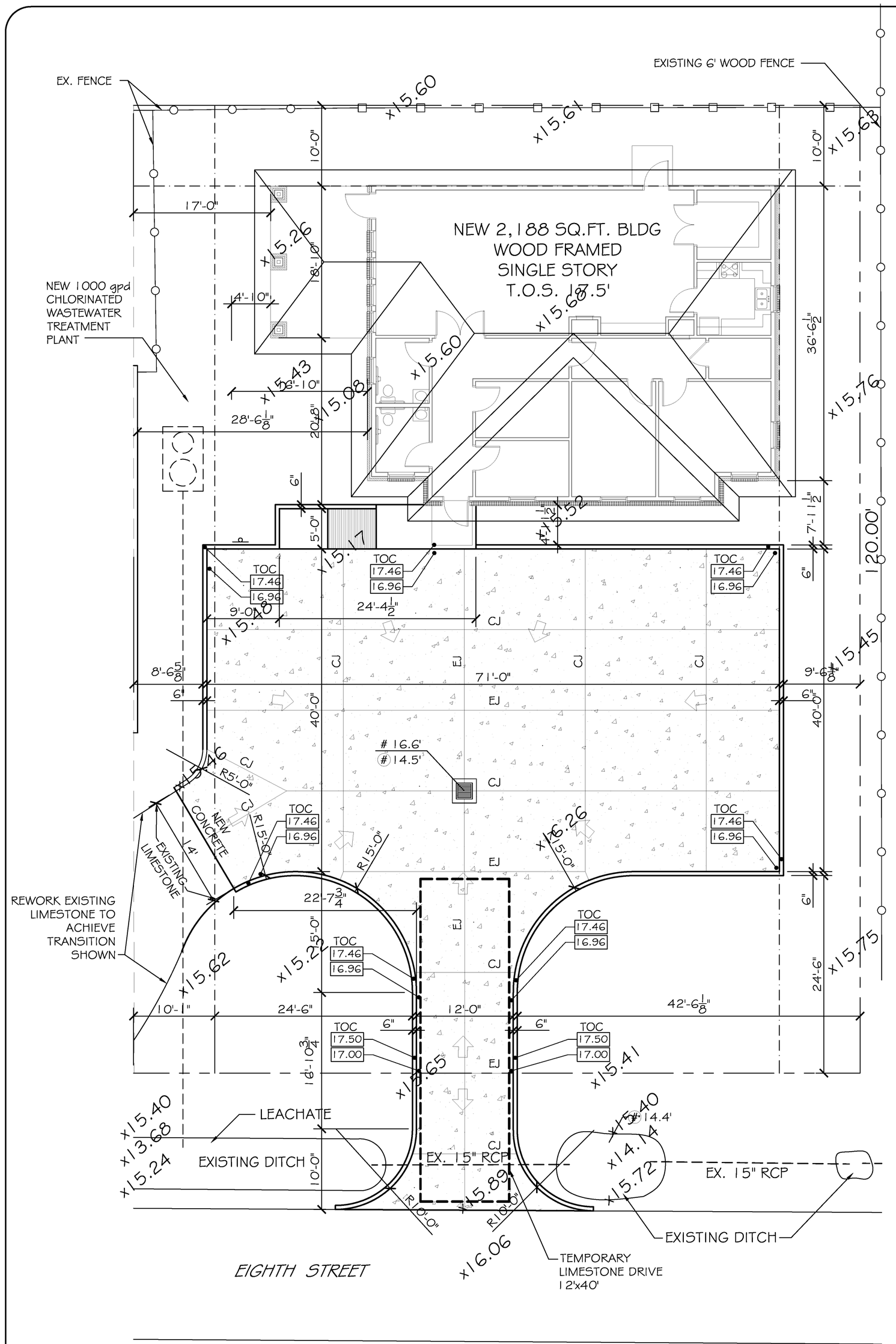

PAVING PLAN

SCALE: 1/8" = 1'-0"

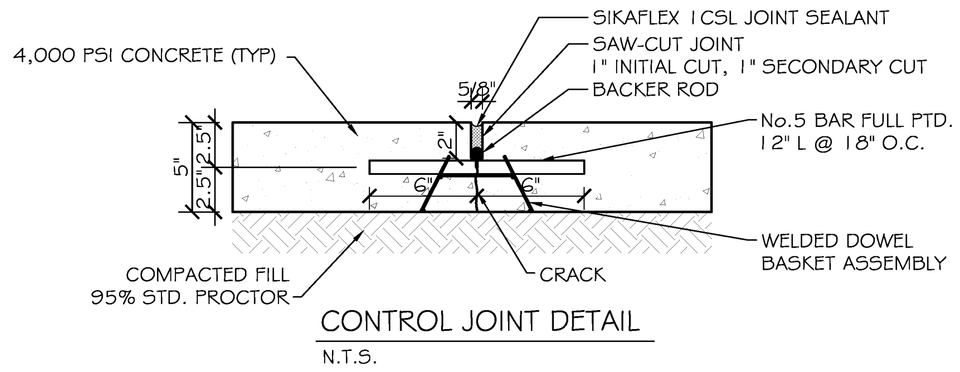

CONTROL JOINT DETAIL

N.T.S.

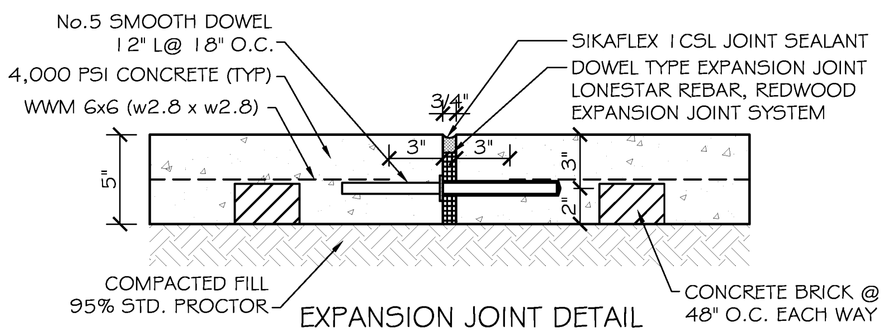

EXPANSION JOINT DETAIL

N.T.S.

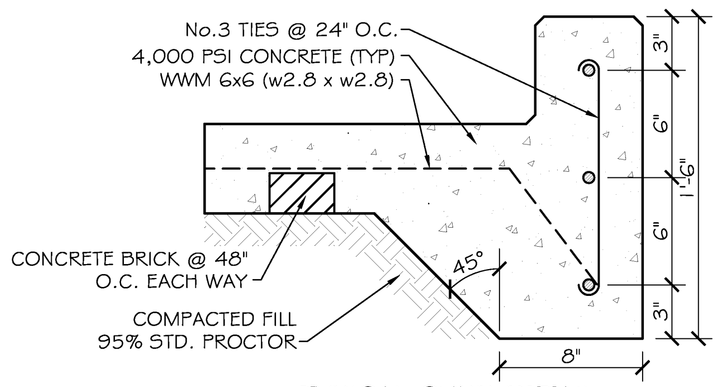

TYPICAL CURB DETAIL

N.T.S.

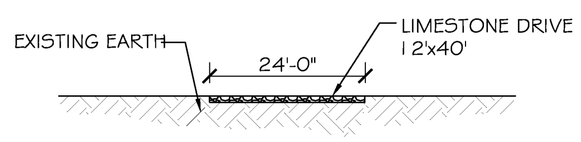

TEMP. ENTRANCE DETAIL

N.T.S.

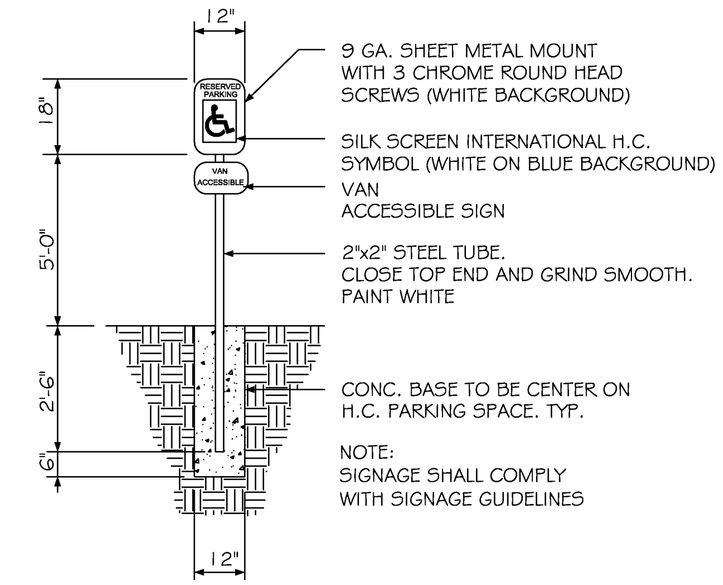

HANDICAP PARKING SIGN

N. T. S.

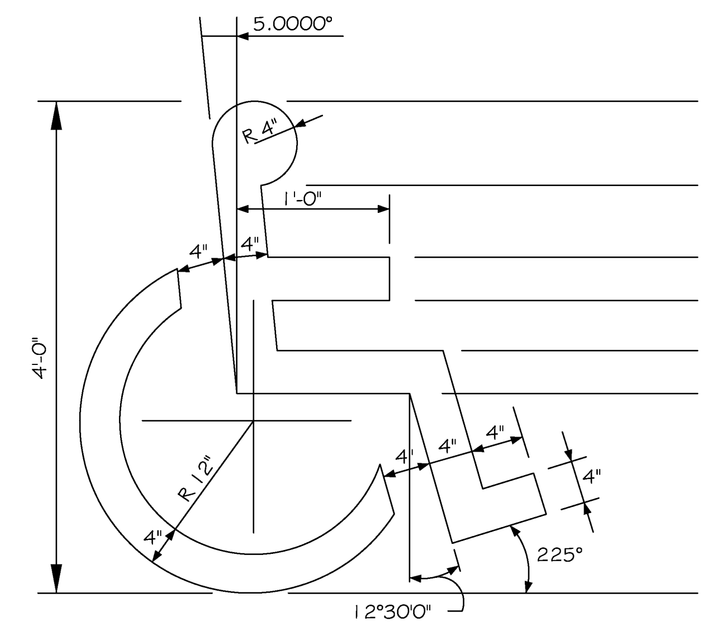

HANDICAP SYMBOL DETAIL

N. T. S.

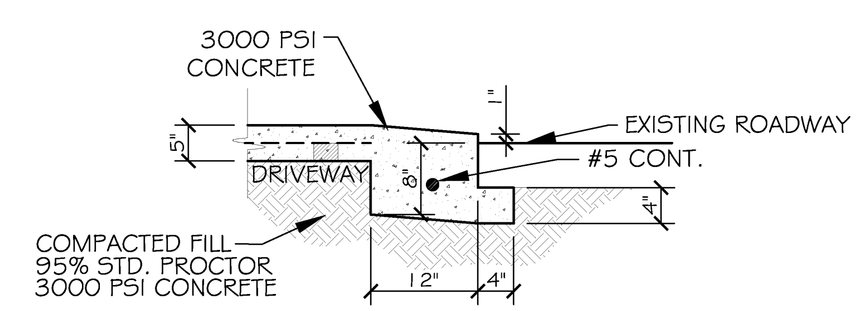

DRIVEWAY SECTION (DS)

N. T. S.

LEGEND

	PROPERTY LINE
	BUILDING SETBACK MINIMUM
	NEW DROP INLET w/TEMP. SILT FENCE
CJ	CONTROL JOINT 10'x15'
EJ	EXPANSION JOINT 30'x45'
#	T.O. GRATE ELEVATION
(#)	INVERT ELEVATION
00.00	NEW ELEVATIONS
EL=00.00	EXISTING ELEVATIONS
	TEMPORARY SILT FENCING
	NEW 6" CURB, SEE DETAIL THIS SHEET

DAMMON
ENGINEERING, INC.

CHIEF ENGINEER
EMMETT
DAMMON, P.E.

CHIEF ARCHITECT
ROBERT
WILTSE

554 OLD SPANISH TRAIL
SLIDELL, LA. 70458
OFFICE: 985-649-5832
FAX: 985-641-5950

WEBSITE:
WWW.DAMMONENGINEERING.COM

EMAIL:
DAMMONENG@BELLSOUTH.NET

ARCHITECTURE

ENGINEERING

STUDIES

PLANNING

INVESTIGATION

EXPERT WITNESS

PAUL REES
OFFICE BUILDING
2175 8TH. ST.
MANDEVILLE, LA
70471

PAVING
PLAN

REV:

SCALE: AS NOTED

JOB#: 2104

DATE: 05-20-11

SHEET 5

C-4

OF 20