neptronic®

Steam Humidifier SK300 series BACNET

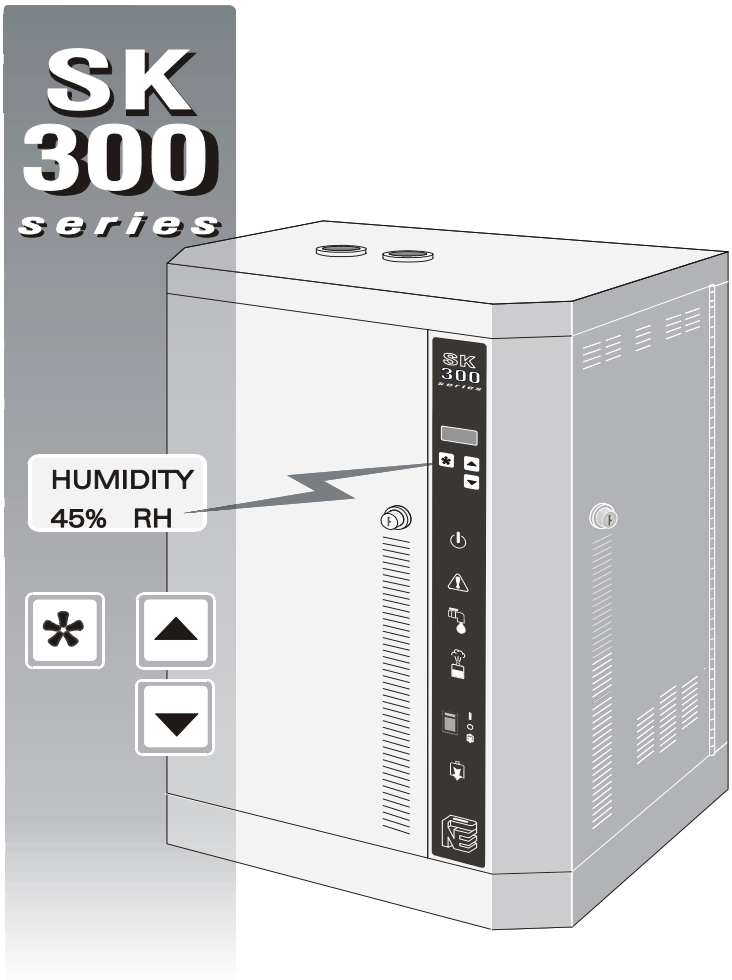

Installation instruction & user manual

READ AND SAVE THESE INSTRUCTIONS

C US

SK300B-ENG/111104

Foreword

1. These installation instructions and operation manual have been developed to facilitate the installation and the operation of the **SK300** series steam humidifier.
   The strict application of these instructions will ensure the conformity of your installation and operation as per manufacturer's recommendations.
2. The application of these instructions is one of the conditions for the application of the warranty.
3. The application of these instructions does not ensure at any time conformity to procedures, regulation or local codes, regarding electric installation and connection to local water supply.
4. This product has been declared to conform to applicable Canadian and American safety standards and directives and bear the CSA (c) & (us) mark. The certificate of conformity CSA is available upon request to the manufacturer.
5. © 2011: All right reserved, this document cannot be reproduced totally or partially by any mean whether, electronic, mechanical, photocopy, recording or other, without prior written authorization of National Environmental Products Ltd.

Manufacturer Presentation

National Environmental Products Ltd. (NEP) is the owner of the brand Neptronic®.
NEP develops, manufactures and services a complete line of:

- Steam humidifiers,
- Humidistat among the most precise and the most reliable on the market,
- Actuators to regulate air damper or valves,
- Electric heaters,
- Thermostats and other control peripherals used to control HVAC equipment.

For more information about our products, visit our web site at ***www.neptronic.com***

Each Neptronic® product benefits from over 35 years of experience of our qualified staff.
From the inspiration to realization, innovation has been the standard in design. As the result of this dedication, NEP Ltd. owns several patents, notably the ENERDRIVE system and the AFEC system.
Manufacturing is conducted on the premises of our modern 80,000 sq.ft. (7 000m^2) facility in Montreal, Canada.
Our quality system is built on the ISO 9001 model.

Our vision **" Customer for Life"** is realized by listening to their needs and by supplying them with products, which exceed their expectations in quality, functionality and durability.

National Environmental Products Ltd.
Tel. *(Toll free)*: 1 800 361-2308
Tel.: (1) (514) 333-1433
Fax: (1) (514) 333-3163
Fax Customer service: (514) 333-1091

Business hours: from Monday to Friday, 8:00am to 5:00pm (Eastern time)

Table of contents

Foreword and Manufacturer Presentation i
1. Presentation 2
1.1. Overview 2
1.2. Definition 3
2. Characteristics 4
2.1. Dimensions & weight 4
2.2. Option – Weather proof enclosure general dimension and weight 5
2.3. Output and power consumption 6
3. Mechanical installation 7
3.1. General recommendations 7
3.2. Positioning 7
3.3. Wall mounting 7
3.4. Weather proof enclosure unit positioning and mounting 8
4. Steam dispersion system selection and positioning 9
4.1. Steam dispersion system selection 9
4.2. Positionning of S.A.M or S.A.M.E2 11
5. Steam output connection 14
5.1. Typical installation 14
5.2. General recommendations 14
5.3. Installation of "S" traps on the steam line 14
5.4. Position of steam output 15
5.5. Installation of humidifier with Space Distribution Unit (SDU) 16
6. Plumbing connection 17
6.1. Water supply 17
6.2. Drain connection 18
6.3. Weather proof enclosure plumbing connection 18
7. Power supply connections 19
8. Low voltage control connections 20
8.1. Modulating Humidifier 20
8.2. Common Alarm Connections 22
8.3. Controls Placement (steam dispersed into a duct or AHU) 23
9. BACnet® interface set-up 24
9.1. Locating BACnet interface PCB 24
9.2. BACnet® port and interface Dip switches setting 24
10. Front panel display features 25
10.2. Scroll Mode 26
10.3. Alarm messages 26
10.4. Programming mode 28
10.5. User Adjustment & Diagnostic menu 30
11. Start up procedure 31
12. Service 32
12.1. General 32
12.2. Evaporation chamber cleaning 32
13. Exploded view & Bill of Material 35
13.1. Exploded view 35
13.2. Bill of material 36
14. Trouble shouting guide 38
General condition of Sale & Warranty 41

1. Presentation

Thank you to have chosen one of the Neptronic® products. You have purchased the best and the most robust humidifier for its category.

1.1. Overview

1.1.1. List of accessories supplied

- 2 sets of keys.
- 2 adjustable collars for the connection of the steam hose for each steam output.
- 1 female compression fitting ¾ hydraulic for the drain output of the evaporation chamber.
- 1 female compression fitting ½ hydraulic for the drain output of the drip pan.
- 1 female fitting and a braided hose for the water supply connection.
- 1 Installation instruction and operation manual.

1.1.2. Overview of the Humidifier

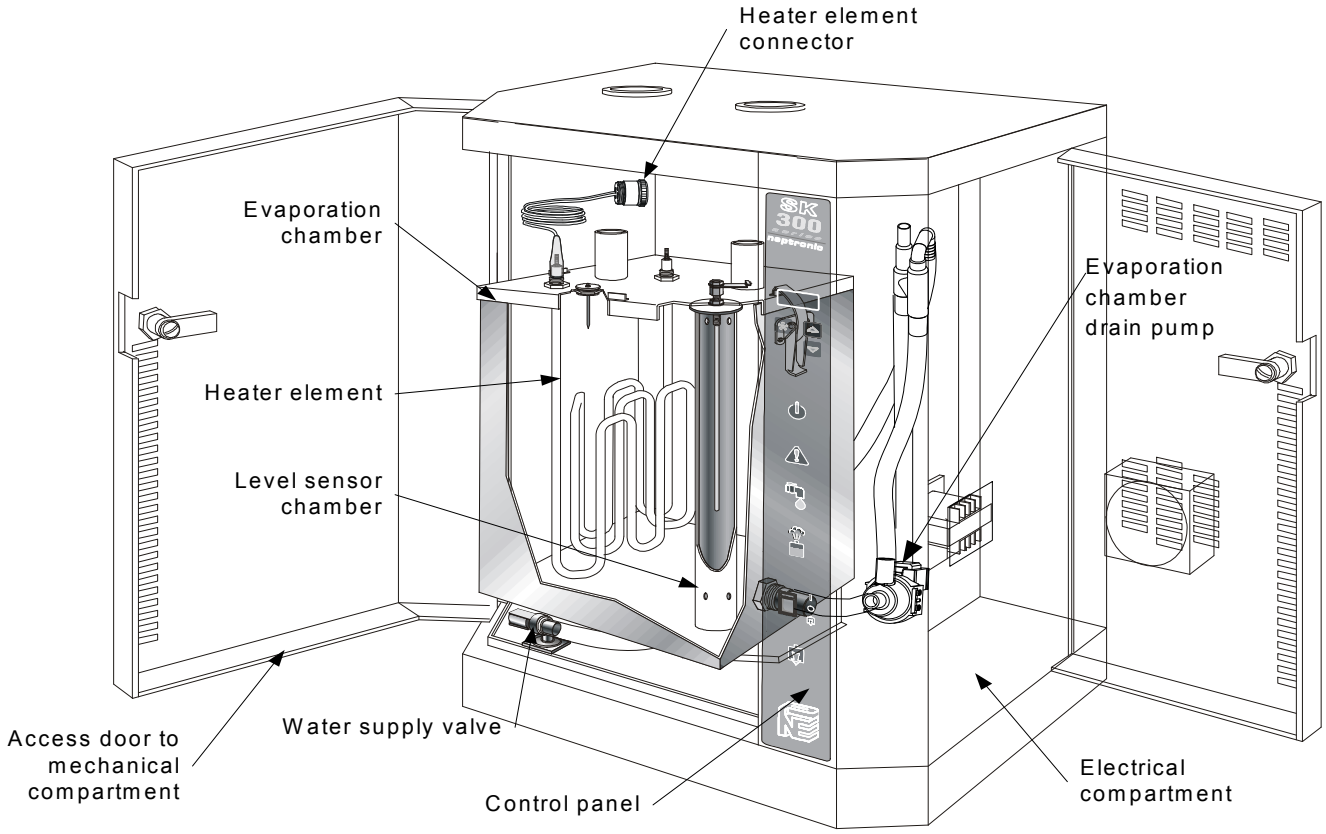

(Illus. 1)

1.1.3. Options avalaible

The following options are available when purchasing a SK300 humidifier:

- Modulating control humidifier – suffix M (i.e. SK320**M**)
- Humidifier for system supplied with Deionised water or Reverse Osmosis water, dissolved solids more than 1 ppm (SF DI-APPLICATION)
- Humidifier for system supplied with Deionised water or Reverse Osmosis water, dissolved solids more than 0.028 ppm (SF ULTRAPURE-DI)
- Space Distribution Unit mounted on humidifier (SDU) or remote installation (SDU-REM)
- Network communication system, BACnet – suffix B (i.e. SK320M-600-3**B**)
- Stainless steel humidifier cabinet – suffix P (i.e. SK320M-600-3**P**)
- Dry contact to activate an external fan relay on a call for humidity (SF SK300FANRELAY)

1.2. Definition

1.2.1. Evaporation chamber

Assembly including the metal cylinder and a cover equipped with one or several heater elements. It is the heart of the humidifier, which produce steam.

1.2.2. SDU (Space Distribution Unit)

Integrated steam distribution unit, optional on certain humidifiers.

1.2.3. Multi-Steam system

Custom made system of steam distribution. This system is designed to allow very short absorption distances (less than 3 feet or 900mm).

1.2.4. S.A.M. (Steam Absorption Manifold)

Steam manifold adapted to air duct size to allow steam absorption in relatively short distance (less than 5 feet or 1500mm).

1.2.5. S.A.M.E2 (Steam Absorption Manifold with 2 Eyelets)

Steam manifold with two eyelets adapted to application with restricted air duct dimensions to allow steam absorption in relatively short distance (less than 5 feet or 1500mm).

2. Characteristics

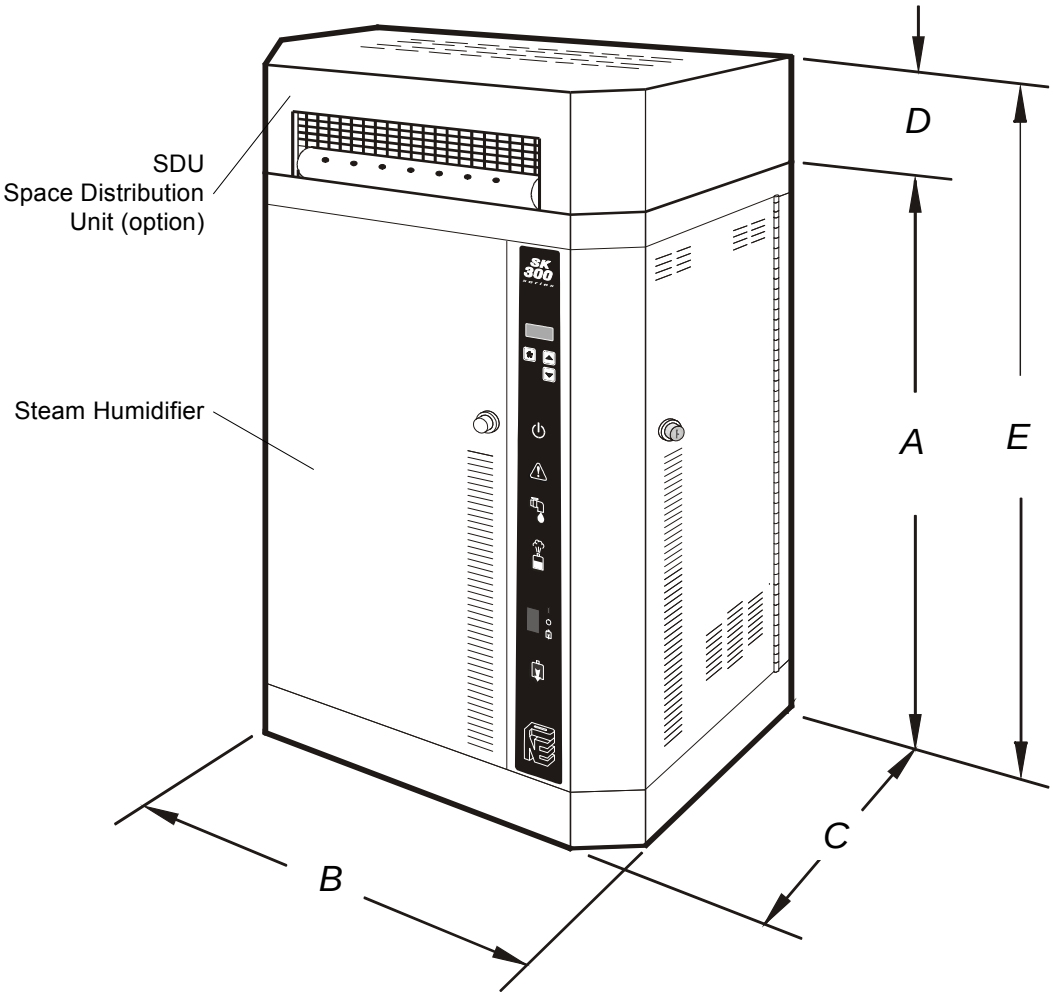

(Illus. 2)

2.1. Dimensions & weight

Model	Dimensions of the cabinet inch (mm)							Option SDU Model Weight lb (kg)
	A	B	C	D	E	Weight lb (kg)		
						Empty	Full of water	
SK302 SK304 SK306	23 ½ (597)	18 ½ (470)	11 ½ (292)	5 ⅝ (140)	29 ⅛ (737)	44 (20)	57 (26)	SDU-1 20 (9)
SK310 SK314	28 ½ (724)	21 (533)	12 ½ (318)	6 ⅝ (165)	35 ⅛ (890)	66 (30)	115 (52)	SDU-2 25 (11)
SK320 SK330	28 ½ (724)	21 (533)	12 ½ (318)	12 ⅞ (324)	41 ⅜ (1048)	66 (30)	115 (52)	SDU-3 45 (20)
SK340 SK360	31 ¼ (794)	32 (813)	12 ½ (318)	-	-	110 (50)	205 (93)	-

2.2. Option – Weather proof enclosure general dimension and weight

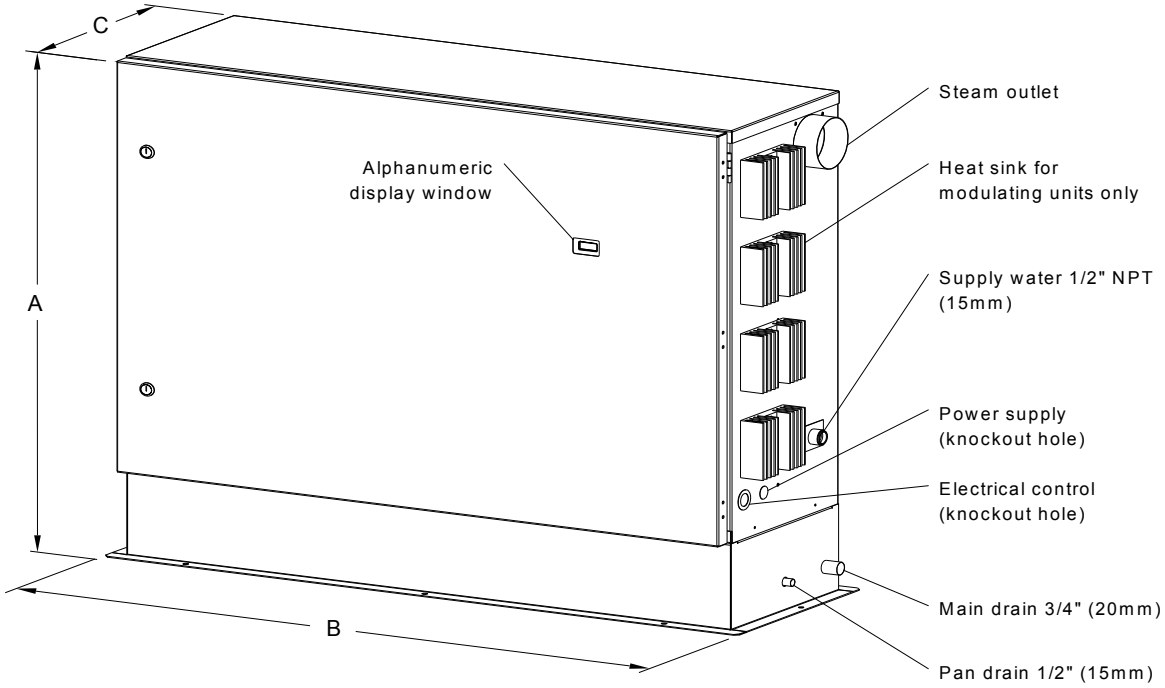

(Illus. 2a)

Model	Dimensions of the cabinet inch (mm)				
	A	B	C	Weight lb (kg)	
				Empty	Full of water
SK302	28.5 (724)	25.8 (655)	11.3 (287)	66 (30)	79 (36)
SK304					
SK306					
SK310	34.5 (876)	29.8 (757)	13.3 (338)	95 (43)	144 (65)
SK314					
SK320					
SK330					
SK340	34.5 (876)	40.8 (1036)	13.3 (338)	165 (75)	260 (118)
SK360					

2.3. Output and power consumption

Model	Steam	Consumption								Steam Output	
	Capacity lb/hr (kg/hr)	Power (KW)	Amperage (A)							Qty	Diameter inch (mm)
			240/1	208/1	208/3	480/1	480/3	600/1	600/3		
SK302	6 (2.7)	2	8.5	10	-	4.5	-	3.5	-	1	1 ⅜ (35)
SK304	12 (5.5)	4	17	19	11.5	8.5	5	7	4	1	1 ⅜ (35)
SK306	18 (8)	6	26	30	16.5	13	7.2	10.5	6	1	1 ⅜ (35)
SK310	30 (14)	10	-	-	28	-	12	-	10	1	1 ⅜ (35)
SK314	40 (19)	13.5	-	-	38	-	16.5	-	13.5	1	1 ⅜ (35)
SK320	60 (28)	20	-	-	*	-	25	-	20	2	1 ⅜ (35)
SK330	90 (41)	30	-	-	-	-	36	-	30	2	1 ⅜ (35)
SK340	120 (56)	40	-	-	*	-	50	-	40	2	2 ⅛ (54)
SK360	180 (82)	60	-	-	-	-	72	-	60	3	2 ⅛ (54)

* Available, please consult factory.

Option:

- On modulating humidifier, the maximum steam output can be programmed with the function "LOCK ON" in Program mode.

WARNING (MODULATING HUMIDIFIER): MAXIMUM POWER OF THE ELECTRICAL INSTALLATION SHOULD BE IN ACCORDANCE WITH THE ABOVE TABLE, DO NOT TAKE ACCOUNT A POSSIBLE REDUCTION OF STEAM OUTPUT, DUE TO MODULATION.

3. Mechanical installation

3.1. General recommendations

- **CAUTION**: RISK OF ELECTRIC SHOCK. DISCONNECT THE APPLIANCE FROM THE ELECTRIC SUPPLY BEFORE TO PROCEED TO INSTALLATION.
- **IMPORTANT**: Mechanical installation should conform to local codes and regulations.
- Location: Plan a location easy to access in order to permit an easy inspection and servicing of the humidifier. Do not install humidifier where failure of the appliance could cause damage to the building structure or to costly equipment.
  This location should be well ventilated; the ambient temperature should not exceed 85°F (30°C).
- The maximum distance between the humidifier and the ventilation duct should not exceed 16 feet (5 meters) (maximum length of the steam hose).

3.2. Positioning

- The front panel and the right side (electrical compartment) should be accessible in order to permit the servicing.
  Leave a clearance of at least 48" (1,25m) to the front panel and 24" (0,6m) to the right side.
- The humidifier should be mounted at a minimum of 39" (1m) to 48" (1,2m) above floor level.
  Leave a clearance of at least 10" (0,25m) under the humidifier for installation of water supply, drain piping and electrical connections.

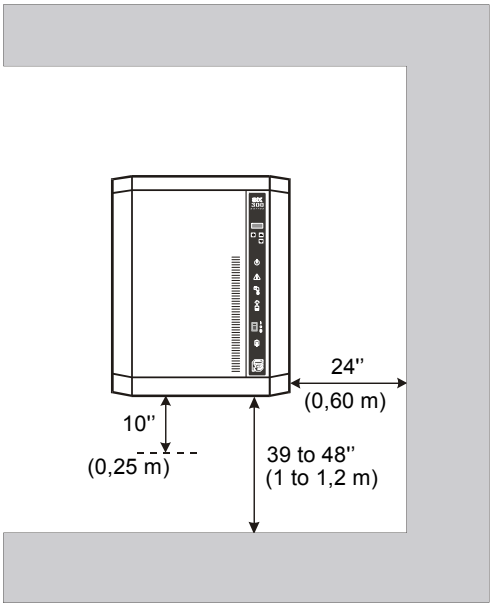

Positioning *(Illus. 3)*

3.3. Wall mounting

- Use the keyholes located on the back panel of the humidifier.
- Before to proceed to the wall mounting, take off the Evaporation chamber sub assembly (see section 12, Servicing).
- Check the solidity of the chosen support or wall (bricks, concrete, stud partition wall, etc) on which the humidifier will be mounted.
- Drill holes for the upper anchors (holes with eyelet) into the support or wall as per dimensions specified in the table (illus.4).
  The holes dimensions (diameter and depth) should by in accordance with the recommendations of the chosen anchors.
- Install then bolt anchors, if required.
- Screw-on the 2 or 3 upper screws (holes with eyelet) of a minimum diameter of #10 (6mm) (screws are not supplied).
  Leave a clearance between head screws and wall in order to permit the mounting of the humidifier.
- Use the keyholes located on the back panel of the humidifier.
- Hang on the humidifier to the 2 or 3 screws; it is preferable let the front door open during this operation.
  According to the size and weight of the humidifier, you may need the help of a second person to assist you.
- When the humidifier is positioned on the upper screws, tighten the screws to secure the humidifier.
- If applicable, install and secure lower screws.

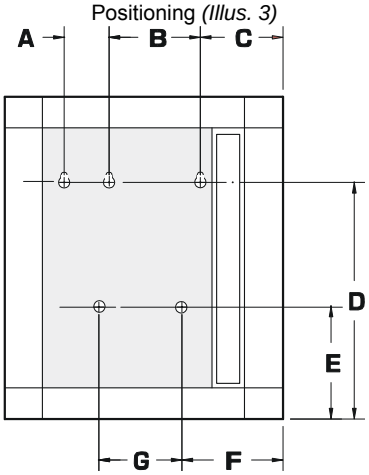

Front view *(Illus. 4)*

Model	Dimensions inches (mm)						
	A	B	C	D	E	F	G
SK302, SK304, SK306	-	8 (202)	5 3/16 (165)	19 ¾ (516)	-	-	-
SK310, SK314, SK320, SK330	-	10 (254)	8 (203)	24 ⅝ (625)	11 (276)	8 (203)	10 (254)
SK340, SK360	4 (102)	12 (305)	10 ½ (265)	27 ½ (698)	11 (276)	22 43/64 (576)	-

3.4. Weather proof enclosure unit positioning and mounting

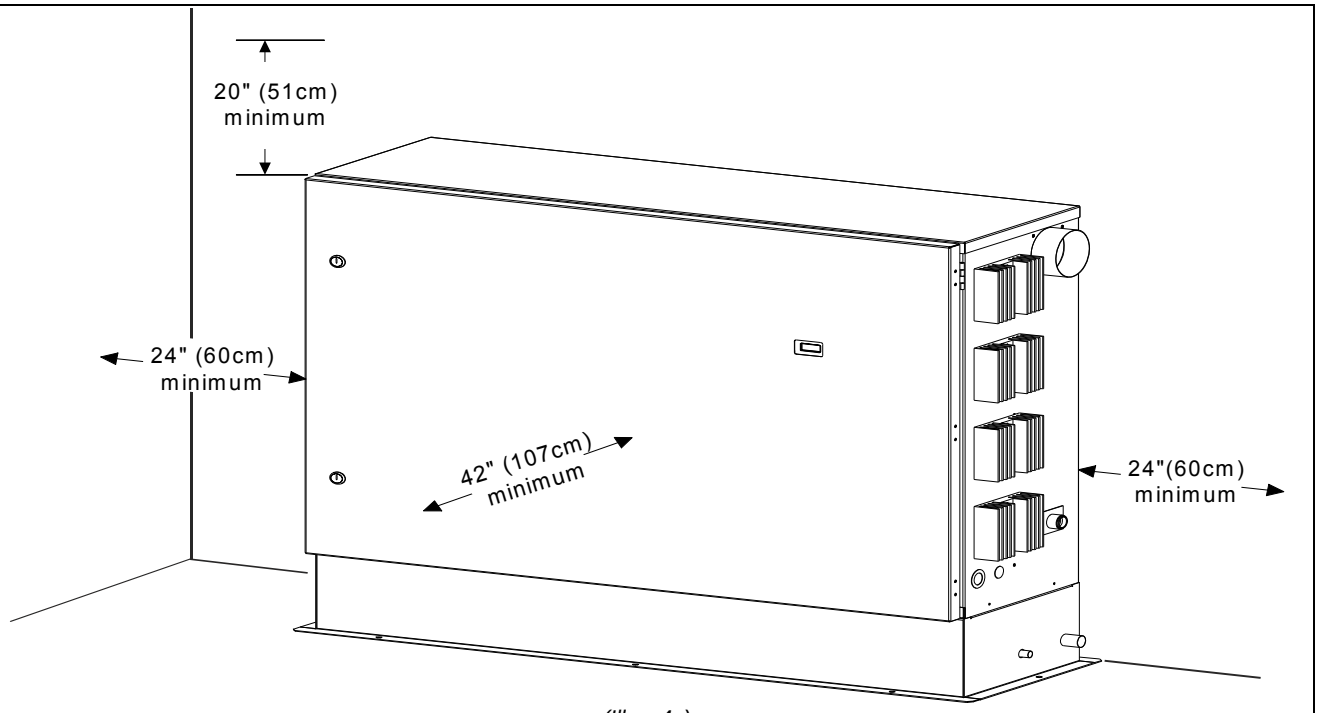

(Illus. 4a)
dimensions in bracket are in cm

General Recommendations

The humidifier should be installed in an easily accessible location to allow proper access for inspection and servicing of the humidifier. The unit should never be installed in a location where unusual malfunction of the unit can cause damage to the building structure or to costly equipment.
Typically the total length between the humidifier and the ventilation duct should not exceed 16 feet (5 meters) (maximum length of the steam hose). For longer steam pipe runs, consult the factory.

Minimum Clearances

Minimum clearances are :

- Top, 20'' (51 cm) minimum
- Both sides, 24'' (60 cm) minimum
- Front, 42'' (107 cm) minimum

Note: Above minimum clearances are indicated for inspection and servicing access.

The humidifier is designed to be installed directly on the floor/roof or a curb.
Provide a level, solid foundation for the humidifier.
Ensure that the floor/roof beneath the humidifier is water proof to withstand any water spillage during servicing or if a problem occurs.

Attach securely and safely the SK enclosure.

4. Steam dispersion system selection and positioning

4.1. Steam dispersion system selection

In order to prevent the accumulation of condensation in air ducts, NEP has designed 4 basic configurations of steam distribution to provide the client with the most economical solution for any particular application.

4.1.1. S.A.M. (steam absorption manifold) Horizontal duct

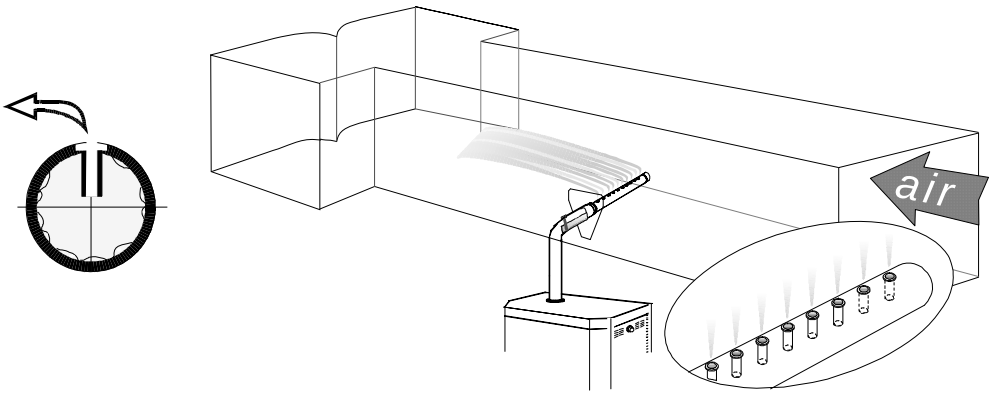

The SAM is to be installed where absorption distances are short, less than 5 feet (1500mm), and/or low duct temperatures are in effect.

(Illus. 5)

4.1.2. S.A.M.E2 (steam absorption manifold) Horizontal duct

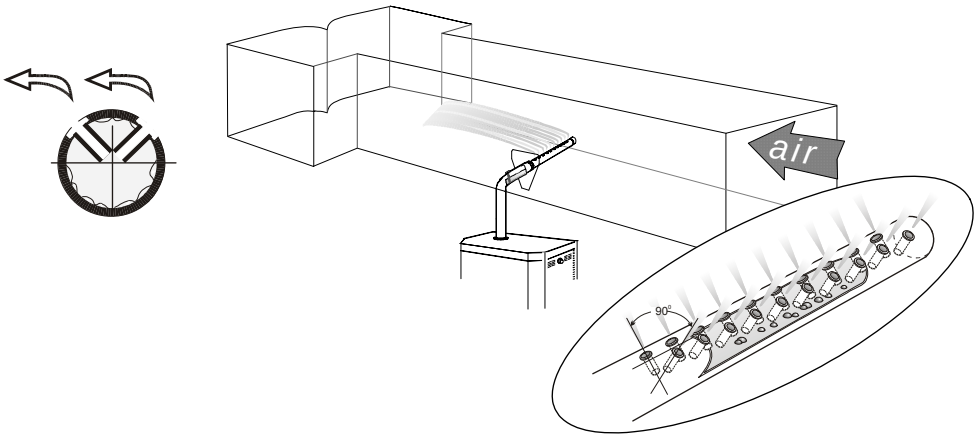

The SAME2 is to be installed where absorption distances are short, less than 5 feet (1500mm) and/or low duct temperatures are in effect. SAME2 are used in applications with restricted duct dimensions.

(Illus. 6)

4.1.3. S.A.M. or S.A.M.E2 (steam absorption manifold) Vertical duct

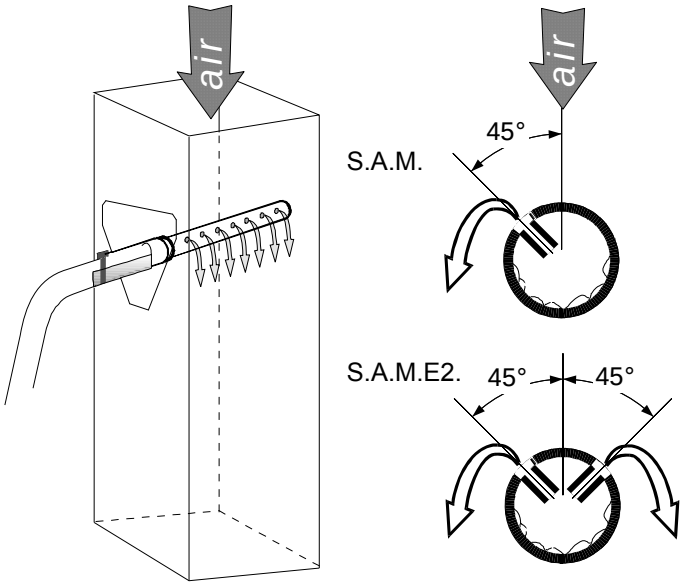

(Illus. 7)

SAM or SAME2 for vertical ducts are used where the absorption distances are normal and the client requires an economical as well as an efficient solution.

4.1.4. Multi-Steam system

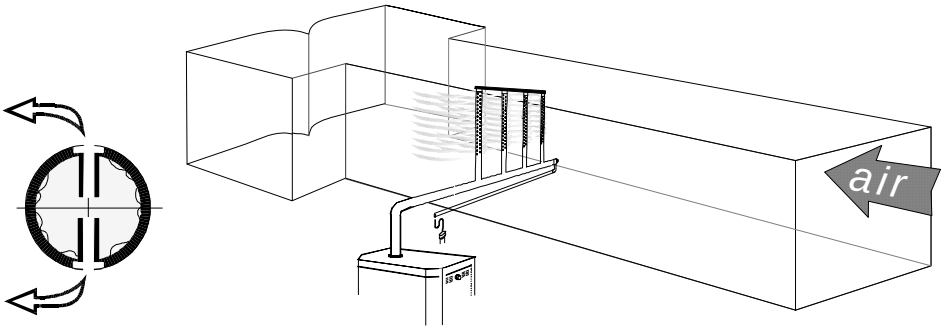

(Illus.8)

The Multi-Steam system is to be installed in critical locations in air handling systems, particularly where absorption distances are very short, less than 3 feet (900mm), or low air duct temperatures are in effect.

The Multi-Steam is custom made to the dimensions of duct or AHU.

Instructions to install Multi-Steam system are described in a specific installation instructions manual enclosed with the Multi-Steam system.

4.2. Positionning of S.A.M or S.A.M.E2

4.2.1. Duct mounting

Steam manifold should be mounted and secured through the side of the air handling unit or duct. Provision should be made for safe accessibility, ideally with an observation light and window.
Check that the construction of the duct wall is suitable enough to support the steam pipe for the duration of the installation life.
Dimension of hole size in the duct must be as per table below:

Steam manifold Ø	*Hole size ØA*
1 ⅜'' (35mm)	2'' (51mm)
2 ⅛'' (51mm)	3'' (78mm)

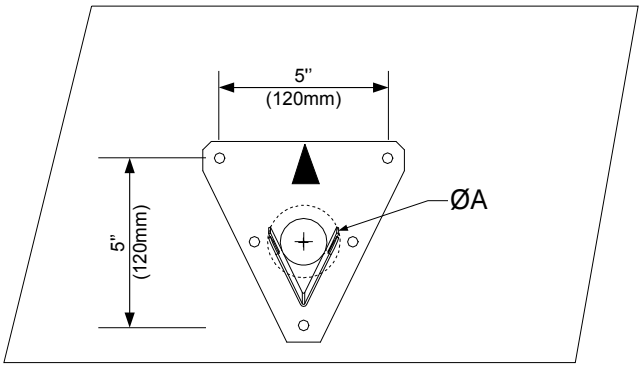

(Illus. 9)

WARNING: Risk of condensing. Ensure that the minimum distance of the end of the manifold is at least 4'' (102mm) from the top of the duct.

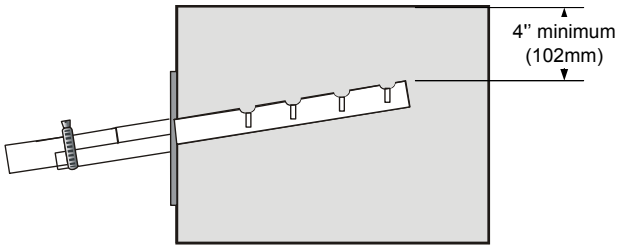

Minimum distance *(Illus. 10)*

4.2.2. Recommendations for SAM distribution pipes

Model	Maximum Capacity		Outlet		Distribution pipes		Maximum static pressure	
	(lb/hr)	(kg/hr)	Qty	Diameter In (mm)	Minimum length in. (mm)	Maximum length in. (mm)	in. of water	(Pa)
SK302	6	2.7	1	1 ⅜ (35)	12 (300)	24 (600)	5	1245
SK304	12	5.5						
SK306	18	8						
SK310	30	14			24 (600)	48 (1200)		
SK314	40	19						
SK320	60	28	2					
SK330	90	41			32 (750)	64 (1500)		
SK340	120	56		2 ⅛ (51)				
SK360	180	82	3					

Note: For higher static pressure, please contact the manufacturer.

4.2.3. Placement of steam pipe in horizontal duct

1 ⅜'' (35mm) diameter pipe

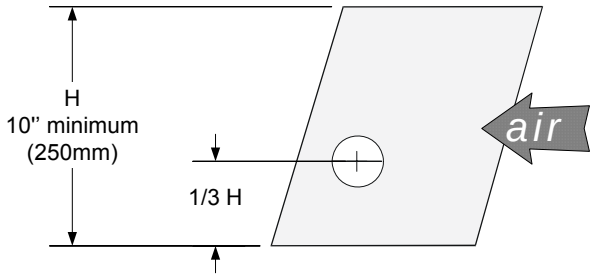

1 pipe *(Illus. 11)*

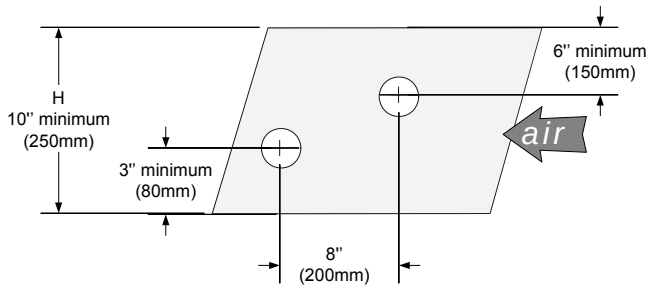

2 pipes *(Illus. 12)*

2 ⅛'' (51mm) diameter pipe

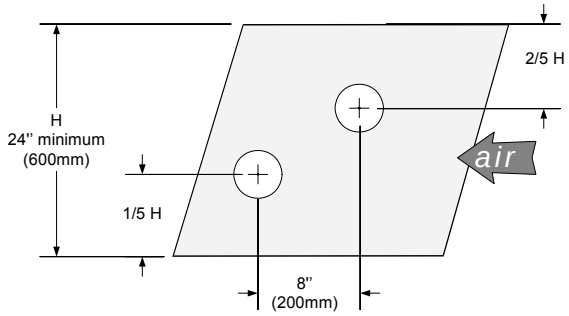

2 pipes *(Illus. 13)*

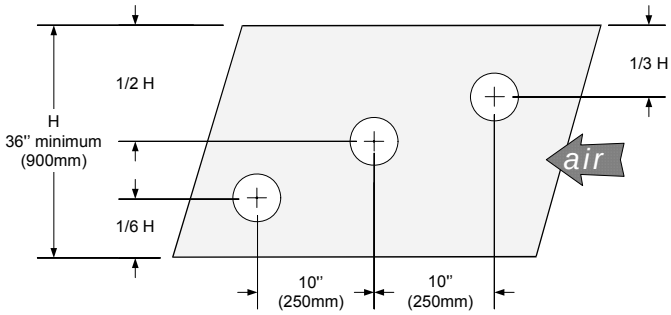

3 pipes *(Illus. 14)*

Note: 2 ⅛'' (51mm) steam pipe must be supported on the end by appropriate duct hanger or strap (supplied by others).

4.2.4. Placement of steam pipe in vertical duct

Eyelet orientation

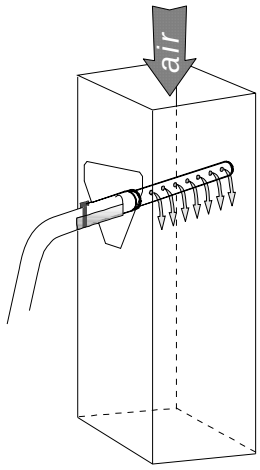

3D view *(Illus. 15)*

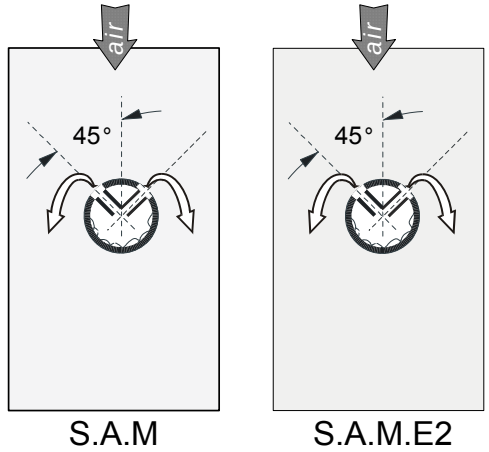

(Illus. 16)

1 ⅜'' (35mm) diameter pipe

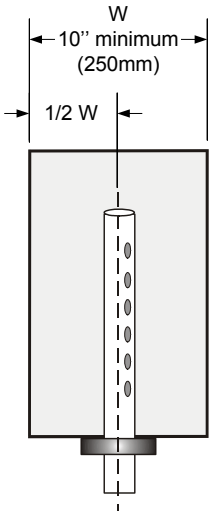

1 pipe *(Illus. 17)*

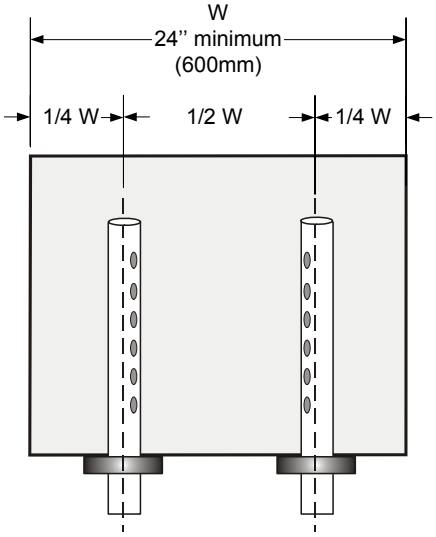

2 pipes *(Illus. 18)*

2 ⅛'' (51mm) diameter pipe

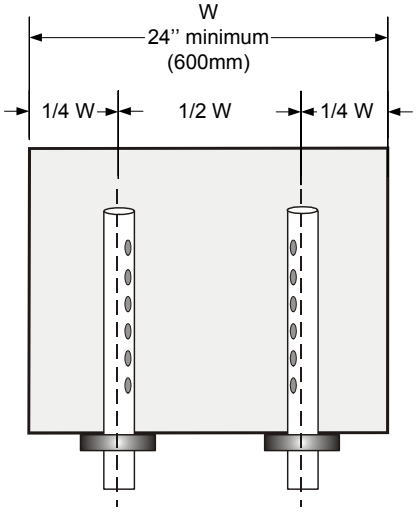

2 pipes *(Illus. 19)*

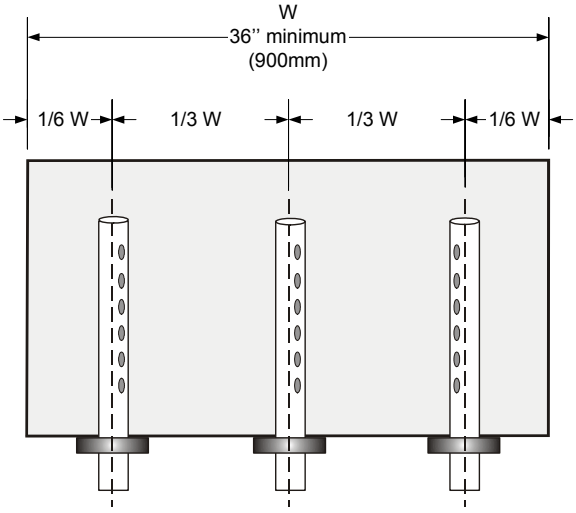

3 pipes *(Illus. 20)*

5. Steam output connection

5.1. Typical installation

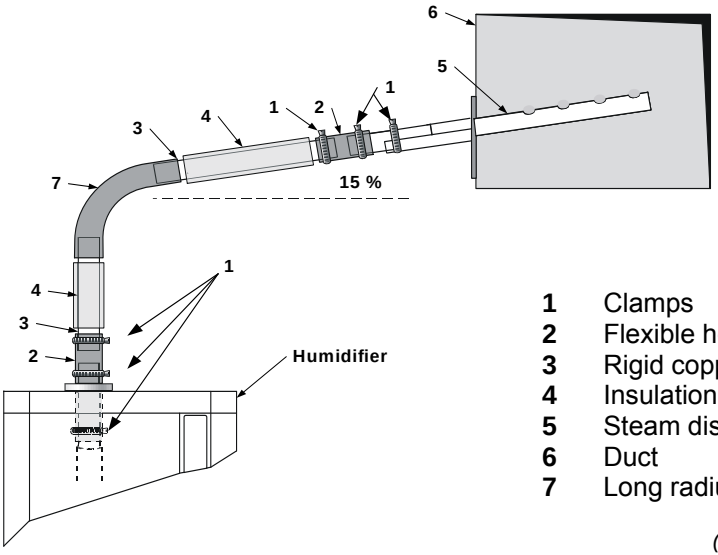

1 Clamps
2 Flexible hose
3 Rigid copper pipe
4 Insulation
5 Steam distribution manifold
6 Duct
7 Long radius copper pipe

(Illus. 21)

5.2. General recommendations

Please follow these general rules of installation in order to avoid any static pressure inside distribution pipes and into the humidifier evaporation chamber, and also to avoid any condensation accumulation.

a) **The slope of the steam hose (rigid or flexible) should not be less than 15%** (7 horizontal length for 1 vertical length) in order to ensure continuous drainage of condensation back to humidifier or to steam trap.

b) **Total length of the steam hose or rigid pipe should not exceed 16feet (5 meters).** Longer runs will result in added condensation losses. Whenever possible, use insulated copper piping. Flexible steam hose should be used for short runs (up to 16ft or 5m) or for interconnecting between the rigid pipe runs.

c) **Whenever using rigid copper, these ones should be insulated to diminish condensation build up.**

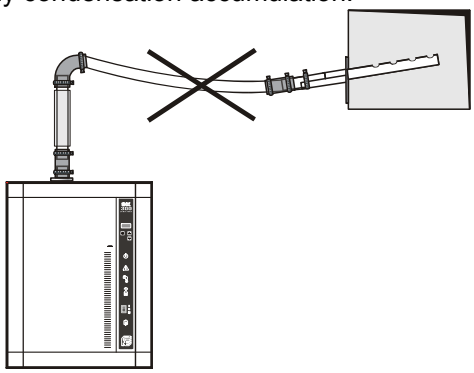

Incorrect installation

(Illus. 22)

5.3. Installation of "S" traps on the steam line

The lowest point of any steam hose or rigid pipe must be the humidifier. If necessary a steam separator (S trap) should be installed higher than the static pressure of the system by at least 2" (51mm).

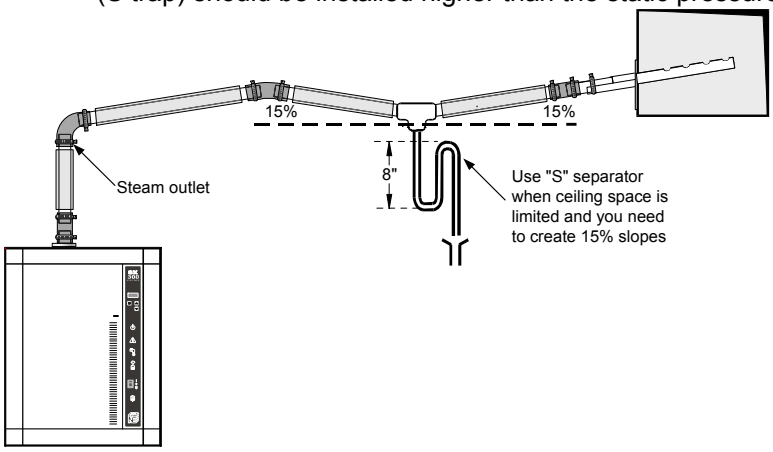

(Illus. 23)

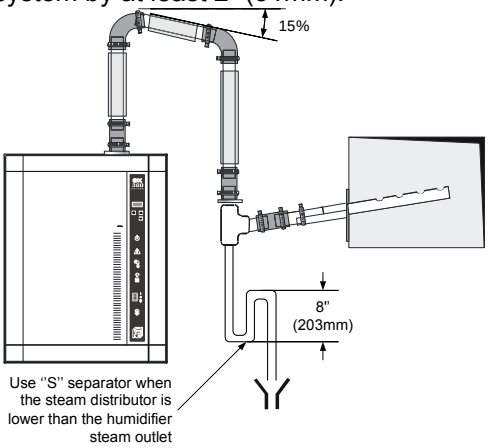

(Illus. 24)

5.4. Position of steam output

Model	Dimensions inches (mm)			
Small Cabinet	I	J		
SK302 SK304 SK306	4 5/16 (110)	4 13/16 (122)		

Small Cabinet
(SK302-304-306)

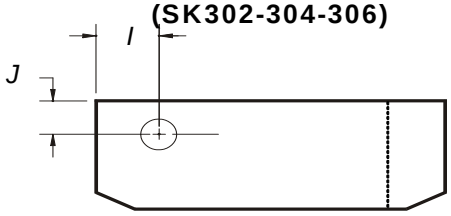

Medium Cabinet	K	L	M	
SK310 SK314	-	4 (102)	5 5/8 (143)	
SK320 SK330	5 9/32 (134)	4 (102)	5 5/8 (143)	

Medium Cabinet
(SK310-314)

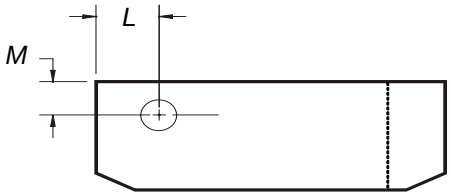

Medium Cabinet
(SK320-330)

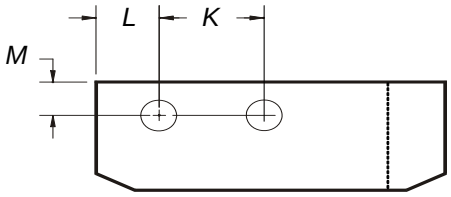

Large Cabinet	N	O	P	Q
SK340 SK360	7 (179)	7 (179)	5 3/16 (132)	5 11/16 (144)

Large Cabinet
(SK340)

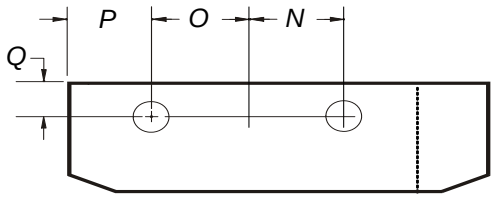

Large Cabinet
(SK360)

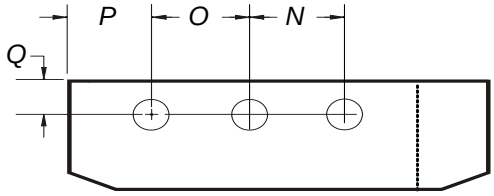

(Illus. 25)

5.5. Installation of humidifier with Space Distribution Unit (SDU)

- The SDU should be installed in an environment where the air is relatively clean. This will avoid the blower from getting clough with dust.
- The humidifier should be mounted such that the SDU fan section is at least 78" (2m) above the floor.
- A minimum clearance of 18" (0.45m) from the ceiling should be allocated to avoid ceiling and wall condensation.
  If additional ventilation is not present, the fan should have a clearance from the ceiling of at least 54" (1.35m). Proper ventilation must be observed to avoid ceiling and wall condensation.

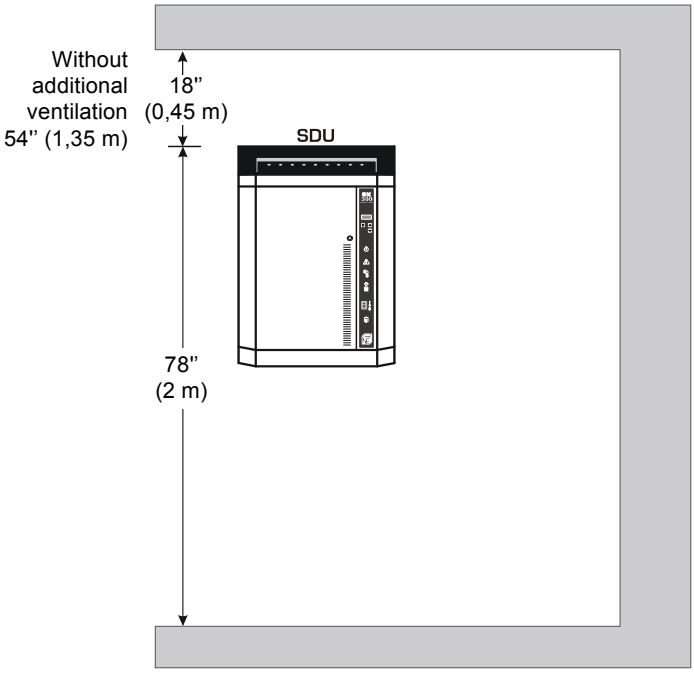

SDU mounted on humidifier *(Illus. 26)*

SDU remote installation:

- The SDU can be in a different location from the humidifier (remote SDU). Please follow the piping recommendations (section 5.2).
- Mount the SDU to the wall on brackets (not supplied), do not drill mounting holes thru the cabinet of the SDU.
- Connect the steam hose(s) to the bottom inlet(s) of the SDU to the top of the steam outlet(s) of the humidifier. Secure the hose(s) with the supplied hose clamp.
- Connect the condensate hose to the bottom of the SDU to an open drain.
- Connect the electrical wires from the SDU to the top of the humidifier. Field wiring must conform to local codes.

The fan of the SDU will operate for a period of four minutes after steam production has stopped to prevent condensation.

Avoid any obstruction of the ventilation openings on top of the SDU.

Maintenance of the SDU:

- Clean the blower if there is an accumulation of dust.

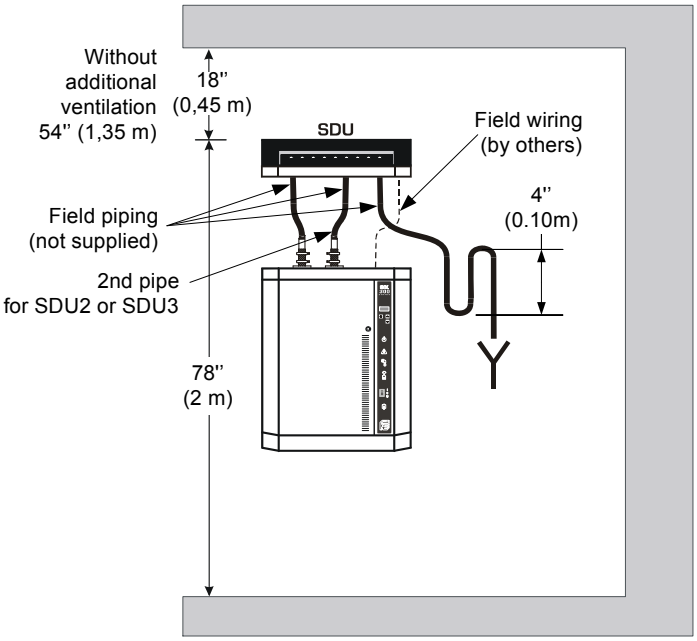

SDU remote installation *(Illus. 27)*

6. Plumbing connection

- **CAUTION:** Water supply installation should conform to local codes and regulations. Any installation work must be carried out by suitably qualified personnel.
- The operation of SK300 series humidifier is independent of variable water conditions, with soft or hard water. Therefore, for normal operation, no pre-treatment of water is necessary.

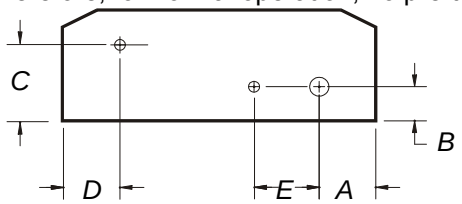

Bottom view *(Illus. 28)*

Model	Dimensions inches (mm)				
	A	B	C	D	E
SK302 SK304 SK306	6 ½ (165)	2 (51)	9 ⅛ (232)	4 ⅛ (105)	1 ¾ (44)
SK310 SK314 SK320 SK330	7 ¼ (184)	1 ¾ (44)	9 ¾ (248)	4 ⅛ (105)	1 ¾ (44)
SK340 SK360	7 (179)	1 ¾ (44)	9 ¾ (248)	4 ⅛ (105)	1 ¾ (44)

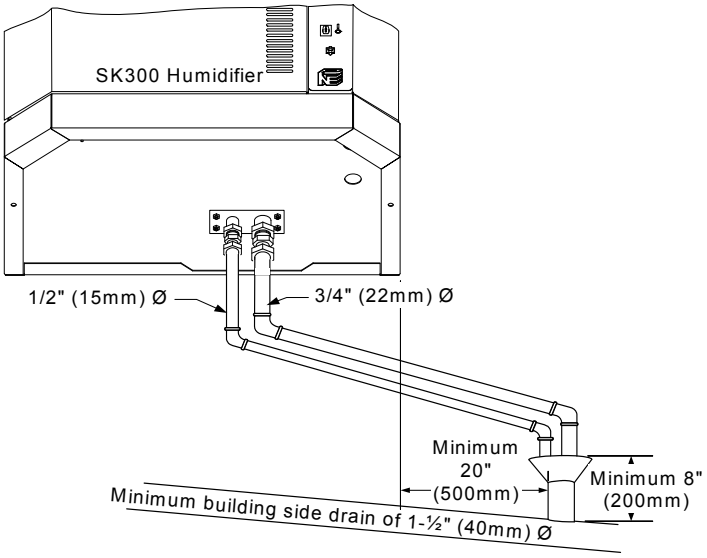

(Illus. 29)

6.1. Water supply

- Water inlet specifications:
  - ✓ Inlet water pressure: 10 to 70 psig (0,7 to 4,8 bars)
  - ✓ Maximum temperature: 85°F (30°C) maximum
  - ✓ 3/8" standard copper water line connection
- A shut off valve (not supplied) should be installed in the water supply line to the humidifier, close to the humidifier to facilitate servicing.
- It is recommended to install a standard water strainer in the water supply line.

Please follow the steps described below:

- Connect 3/8" copper pipe to the 3/8" braided hose (supplied).

- Finger tighten the swivel top 3/4" fitting to the male threaded part of the valve.
  CAUTION: RISK OF DAMAGE TO THE VALVE. DO NOT USE WRENCH TO TIGHEN SWIVEL.

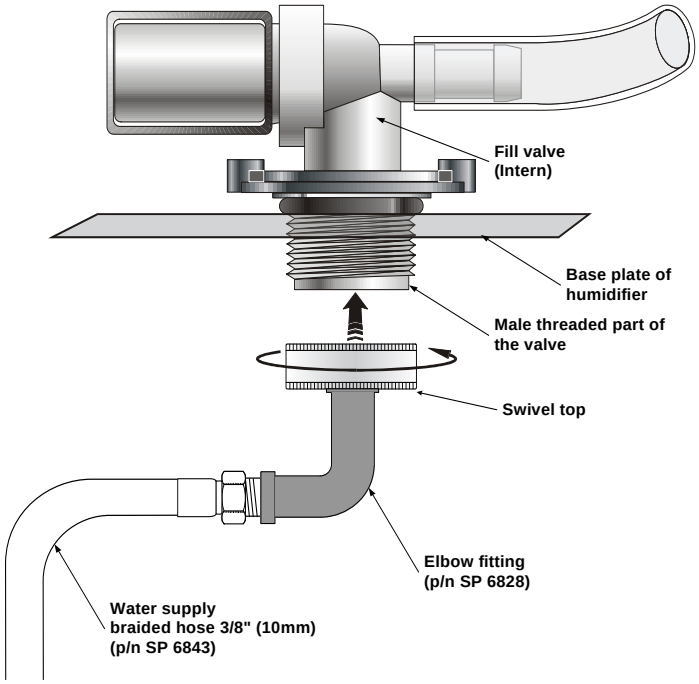

(Illus. 30)

6.2. Drain connection

- **CAUTION:** Water drain installation should conform to local codes and regulations. Any installation work must be carried out by suitably qualified personnel.
- Drain connection specification:
  - ✓ Evaporation chamber water drain temperature: 140°F (60°C).
  - ✓ Standard hydraulic compression fittings: a ¾ (evaporation chamber drain) and a ½ (pan drain).
- 2 hydraulic pipes located under the humidifier (see Illus. 29) must be connected to the drain pipe.
- **Use standard copper hydraulic pipes ¾" and ½".**
- Ensure that the drain pipe dimension is sufficient, especially if more than one humidifier is evacuating into the same drain line.

6.3. Weather proof enclosure plumbing connection

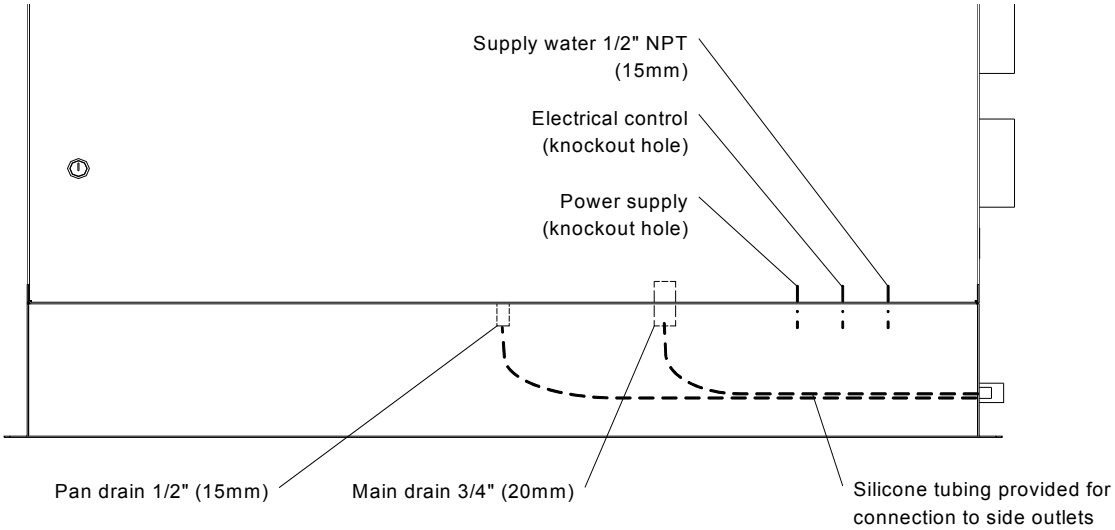

(Illus. 30a - Front view)

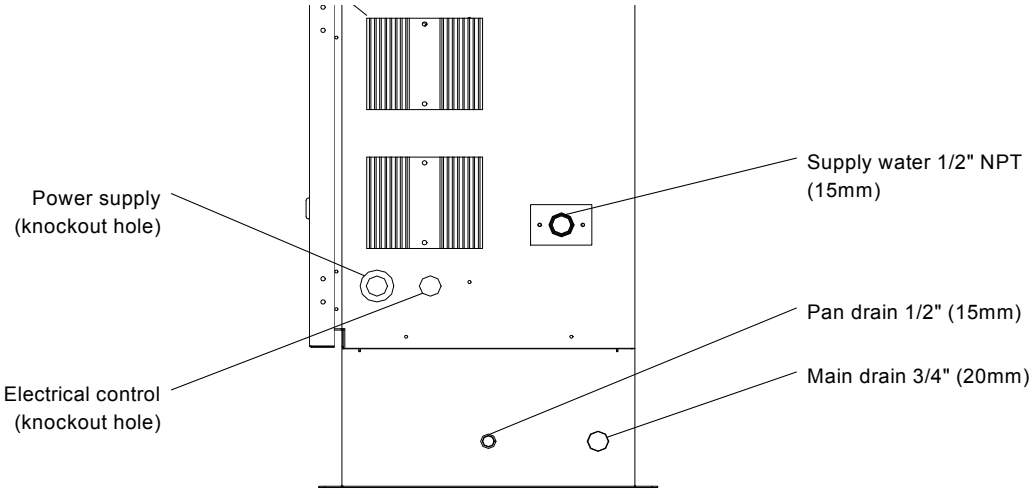

(Illus. 30b - Side view)

7. Power supply connections

- **CAUTION**: RISK OF ELECTRIC CHOC. DISCONNECT THE HUMIDIFIER FROM THE ELECTRIC SUPPLY BEFORE TO PROCEED TO THE CONNECTION.
- **WARNING:** RISK OF FIRE. Do not interchange the power terminal block designated L1, L2 and L3 with Low voltage terminal block designated 1, 2 and 3.
- The wiring to the Humidifier should be done by a qualified electrician, and conforming to the procedure, regulation and local codes.
- Use only coppers conductors.
- An external over current protection and disconnect circuit breaker should be installed on the supply adjacent to the humidifier.
- A knock out (not supply) should be installed at the bottom of the electrical compartment of the humidifier for strain relief of the supply cable.
- Ensure that the size of the wire conductors is appropriate for the current supplied.
- Ensure that each terminal connection is properly secured.
- The ground conductor should be equipped with ring terminal and should be connected directly to the electrical panel on the indicated location.

1 Phase Connection

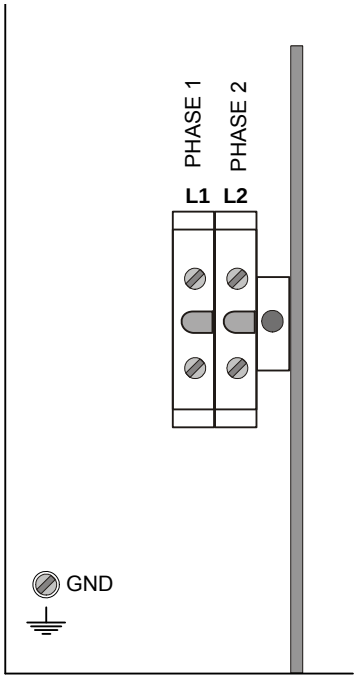

(Illus. 31)

3 Phases Connection

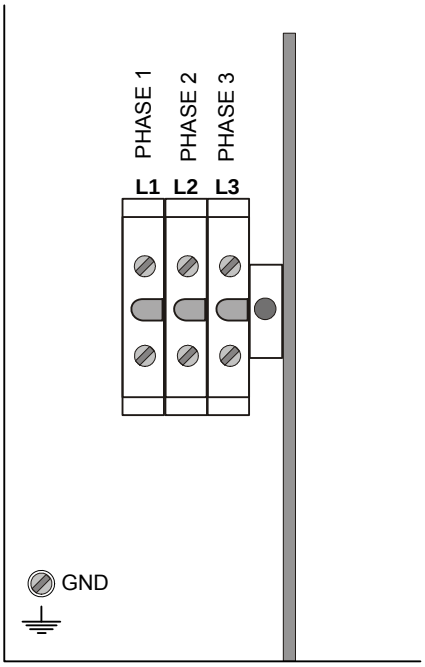

(Illus. 32)

8. Low voltage control connections

8.1. Modulating Humidifier

8.1.1. Humidity controlled by humidistat (external mode)

Connection to HRO20 humidistat.

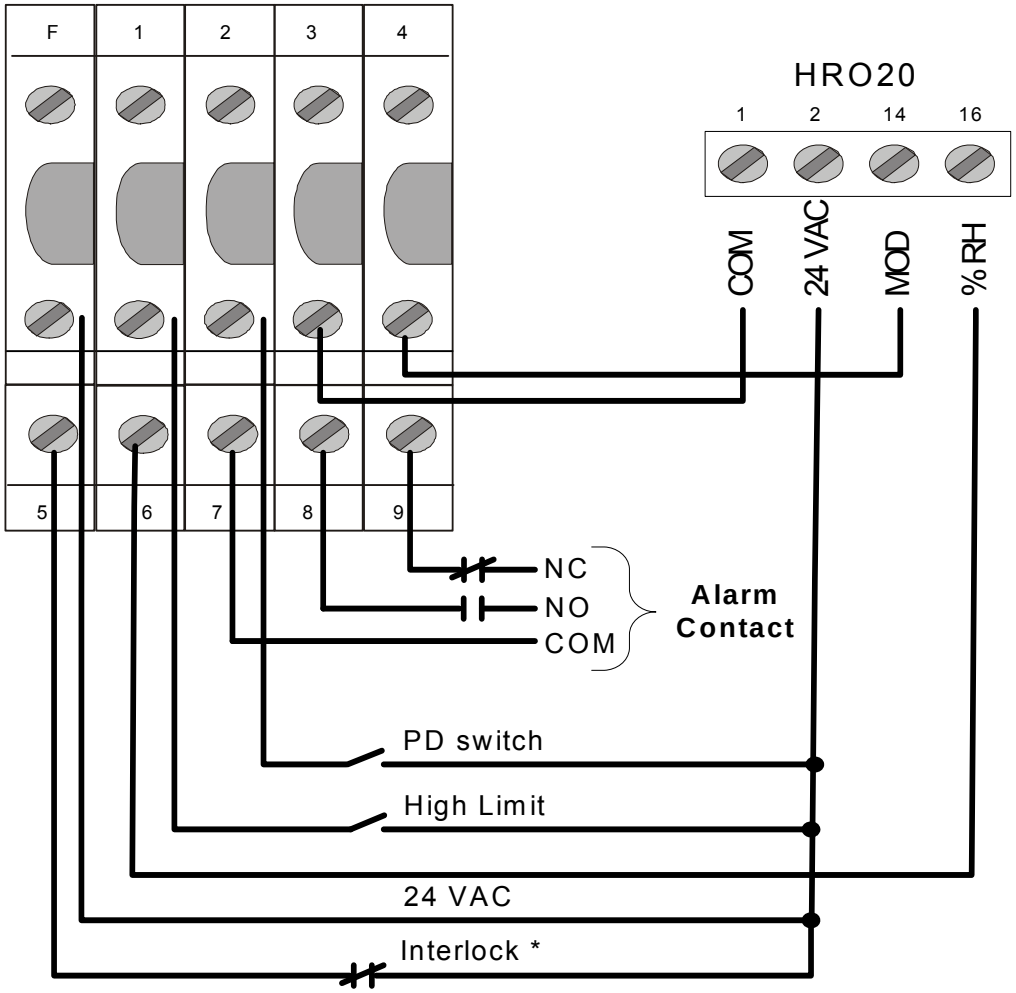

(Illus. 33)

Note: If interlock is not used, jumper between terminal F & 5 must be installed

Note: If the humidifier is equipped with a Space Distribution Unit (SDU), the PD switch is already factory wired inside the SDU, do not wire the terminal #2.

8.1.2. Humidity controlled by humidifier (internal mode)

Humidity controlled by humidifier, using SHR10 or SHC80 as space sensor.

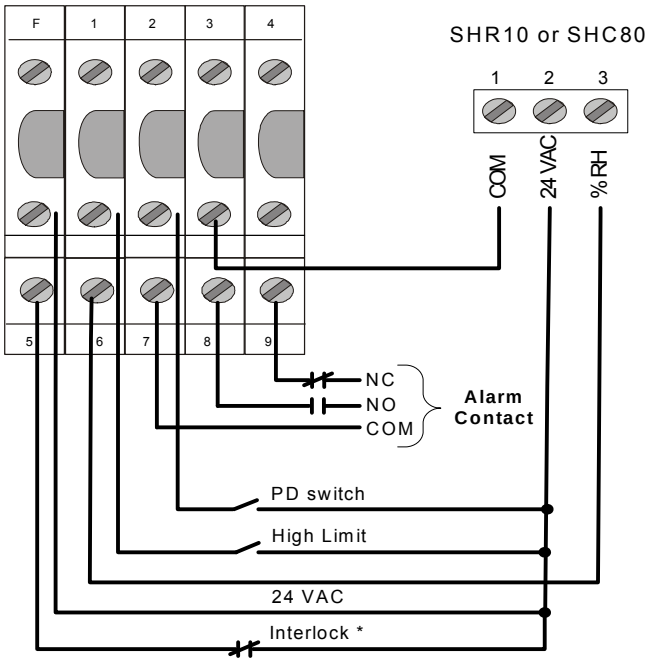

(Illus. 34)

Note: If the humidifier is equipped with a Space Distribution Unit (SDU), the PD switch is already factory wired inside the SDU, do not wire the terminal #2.

VAV system with humidity controlled by humidifier, using SHC80 as high limit duct sensor and SHR10 or SHC80 as space sensor.

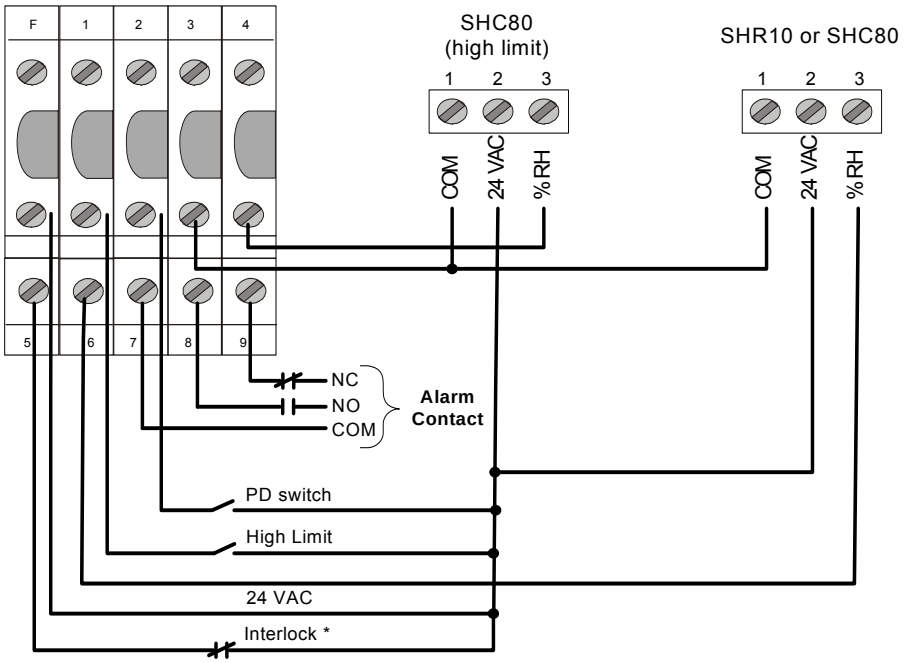

(Illus. 35)

Note: if interlock is not used, jumper between terminal F & 5 must be installed.

8.1.3. Control Signals

On BACNET SK300 Humidifier the selection of the control signal is made through the menu. See §11.2
Please wire the control input to terminal 3 and 4 as indicated on the diagram beside

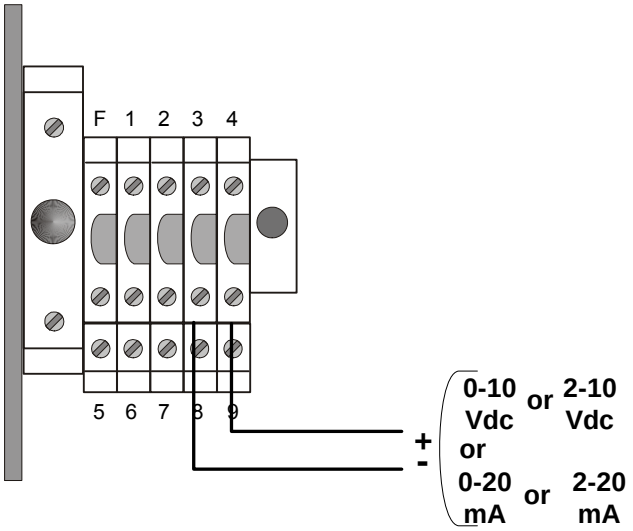

(Illus. 36)

8.2. Common Alarm Connections

A volt free contact is provided in the form of both a normally open and normally closed contact that will switch in the event of an alarm on the SK300 humidifier.

- Wherever possible it is recommended to use the normally closed contact. This contact will open in the event of a humidifier fault.
- These contacts should be used to switch a low voltage, ideally **24V**, with a switching current of no more than **3 Amps**.

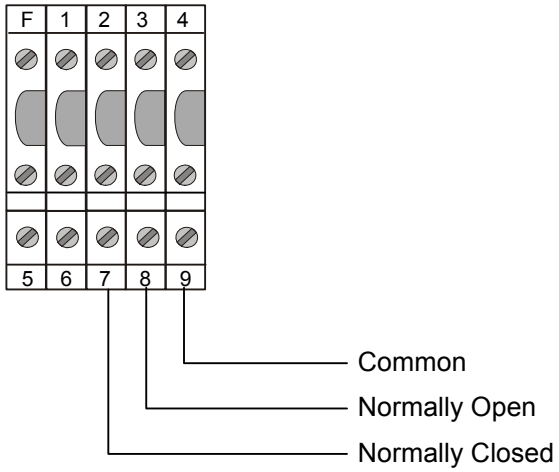

(Illus. 37)

8.3. Controls Placement (steam dispersed into a duct or AHU)

Typical humidifier control system should include along with the humidifier:

- A wall or return duct humidistat
- A high limit duct humidistat,
- An air proving switch.

Placement of these devices is critical to proper operation of the overall system.

- The return duct humidistat must always be located before any outside air intake, in order to ensure accurate sensing of the air from the humidified space.
- Alternatively a room humidistat can be used. The room humidistat should be located on an inside wall or column. It should not be be near any discharge air from supply ducts or sources of heat or cold.
- The airflow switch must be positioned to accurately open on a loss of air flow, to prevent the humidifier from running when there is no air to absorb humidity.
- The high limit humidistat must be positioned far enough - 6’ minimum (1.8m) - downstream of the steam dispersion manifold(s) to prevent it from getting wet, but still allows it to accurately prevent overhumidification of the duct that could result in condensation.

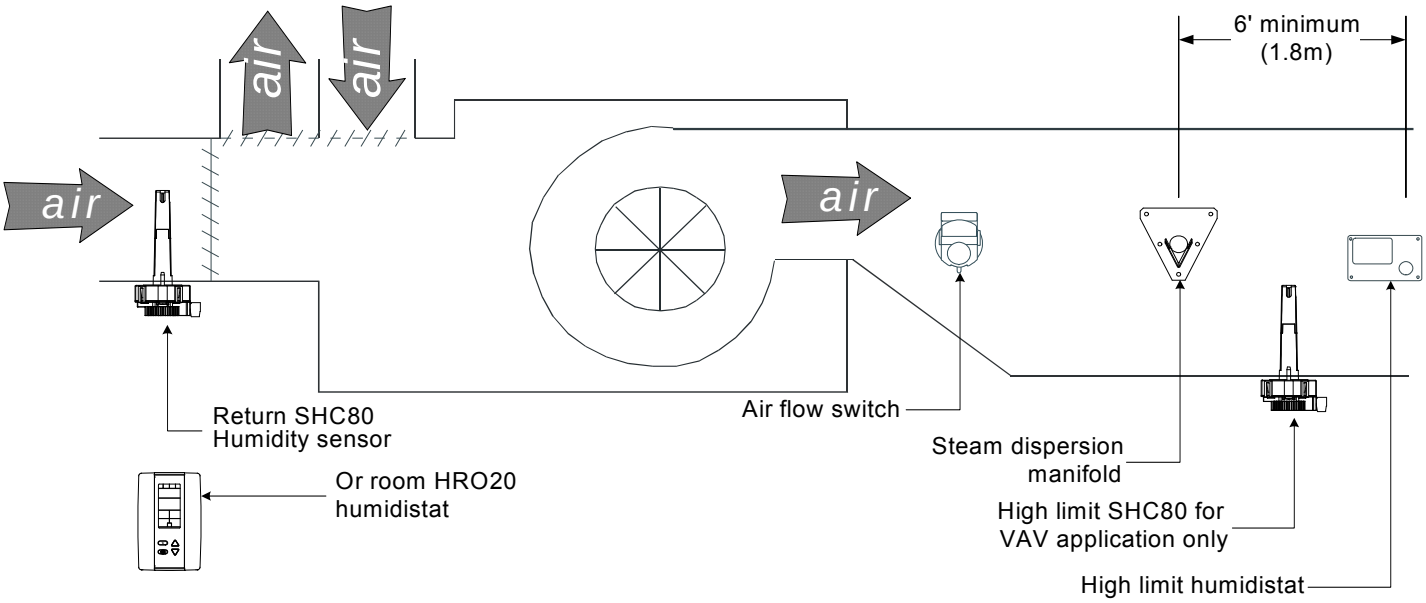

(Illus. 38)

9. BACnet® interface set-up

9.1. Locating BACnet interface PCB

The BACnet interface PCB is located on the top right corner inside the electrical compartment.

BACnet interface PCB.

(Illus. 39)

9.2. BACnet® port and interface Dip switches setting

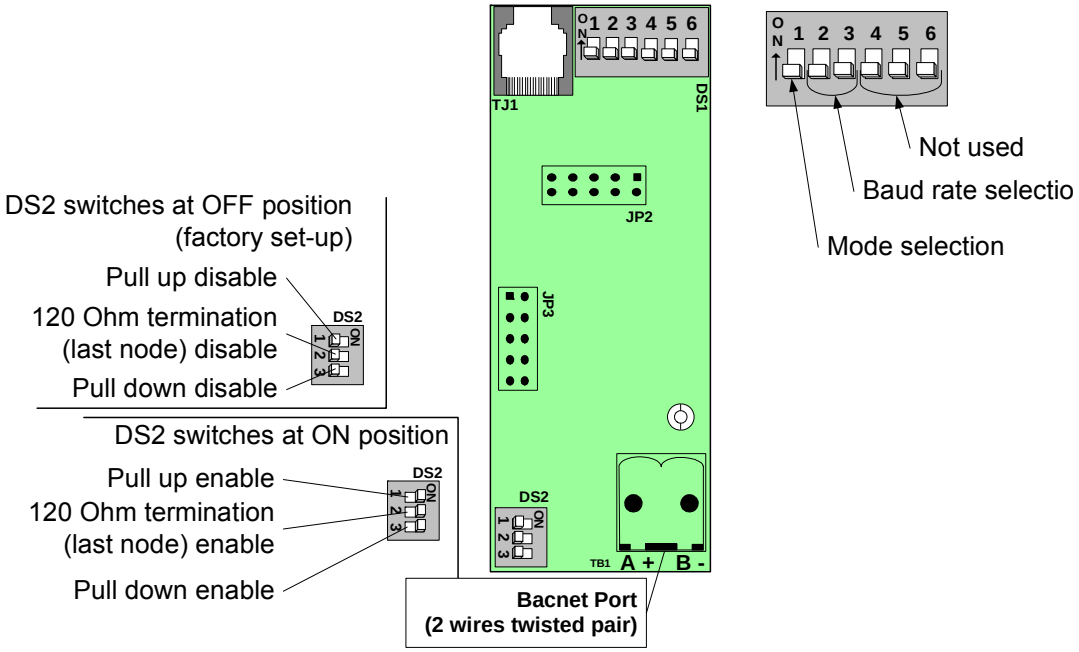

(Illus. 40)

DS1-1 : Mode selection
OFF = Mode Operational *(factory set-up)*
ON = Mode Configuration

DS1-2&3 : Baud rate selection		
Baud rate	*Switch #2*	*Switch #3*
9600	OFF	OFF
19200	ON	OFF
38400	OFF	ON
76800 *(factory set-up)*	ON	ON

10. Front panel display features

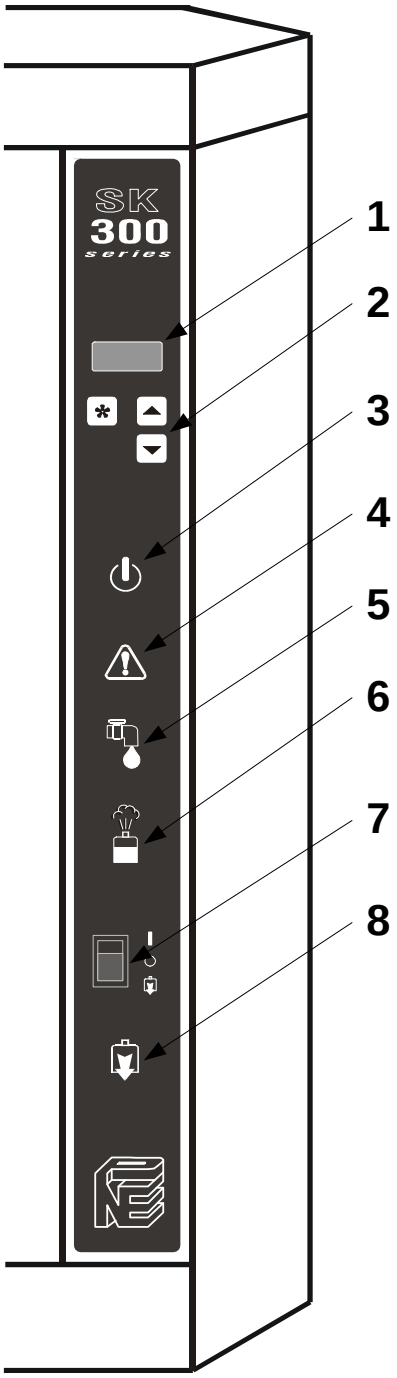

(Illus. 41)

1	Alphanumeric Display: Indicates all operation parameters and the error messages (see section 14 – Trouble shooting).	
2	Push button ✱, ▲ and ▼	
	✱	✱ button: Used to access into program mode.
	▲ ▼	Up and Down button: Used to increase or decrease the controlled parameters of the humidifier.
3	"POWER" indicator	
	≥O≤	The humidifier is powered by electricity and the switch is at the AUTO position.
	O	The humidifier is disconnected from the power supply.
4	"CHECK" indicator	
	≥O≤	The "CHECK" indication is normally off. It will go on as a warning against abnormal conditions of operation. For details consult the Alphanumeric Display (see section 10.3 Alarm messages).
	≥O≤ *blinking*	Maintenance is required. The Running hours have exceeded the Service hours. (see section 12 – Service).
	O	No abnormal conditions of operation.
5	"FILL" indicator	
	≥O≤	Indication that the water supply (fill) valve is open.
	O	Indication that the water supply (fill) valve is closed.
6	"STEAM" indicator	
	≥O≤	ON/OFF model, the STEAM indicator lights when the contactor is closed and steam is being generated.
	≥O≤ *blinking*	Modulating model, the STEAM indicator blinks ON and OFF in proportion to the percentage of steam output the humidifier is generating. (The proportion is displayed on the alphanumeric display (1)). For 100% the indicator will be lit with no blink.
	O	There is no steam being produced.
7	Switch "AUTO/OFF/DRAIN"	
	AUTO	Position AUTO (I): Humidifier will generate steam based on demand from the humidistat.
	OFF	Position OFF (O): Humidifier will shut off.
	DRAIN	Position DRAIN: Humidifier will stop operating and the evaporation chamber will drain the water out. This will be done tipically at regular service.
8	Indicator "DRAIN"	
	≥O≤	Drain pump is on, whether as a result of an automatic drain cycle or because the front panel switch is manually set to DRAIN.
	O	Drain pump is off.

10.1.1. "OFF" Mode

- When the rocker switch is in the "OFF" position, the display shows the model of the unit and the program version number.
- By pushing the * button on control panel, you can access to the serial number of the humidifier.

SKB 3XX
NEP r1.5

(Illus. 42)

10.2. Scroll Mode

When the rocker switch is in the auto position, the display scrolls the following information every 6 seconds:

Display	*Description*	*Comment*
HUMIDITY 45.2%	Percent of relative humidity	Only on modulating units (suffix M).
DEMAND 92%	Percent of demand	Control signal input respand from 0-100%
OUTPUT 100%	Percent of output of the humidifier	Capacity output of the humidifier.
WATR LVL 92%	Water level in percent to the objective	100% correspond to optimum water level in evaporation chamber.
WATR TMP 65C	Water temperature in Celscius	Water temperature inside the evaporation chamber.

10.3. Alarm messages

When the following conditions occur, the alarms messages override the scrolling information:

Display	*Description*	*Comment*
AIR FLOW OPEN	Air flow proof	The airflow is not detected by the air pressure switch (modulating unit only).
HI LIMIT CUT-OUT	Hi limit cut out	Humidity level has exceeded the set point on the high limit humidistat.
DRAIN CYCLE	Drain cycle	The unit is in the automatic drain mode
OVER HEATED	Overheated	The temperature inside the container has exceeded the boiling temperature. The humidifier has automatically shut off
PROBE DEFECTED	Defected probe	The water level sensor is not operational. The humidifier has automatically shut off

Display	*Description*	*Comment*
NO LEVEL	No water	Water has not reached the level probe
CLEANING REQUIRED	Cleaning required	The humidifier has reached the number of hours of operation and requires cleaning of the evaporation chamber with no interruption o fthe operation of the humidifier.
SERVICE UNIT NOW	Service unit now	The humidifier has reached the number of hours of operation and requires service. The operation of the humidifier is interrupted.
FOAMING CYCLE	Drain foam	AFEC (Anti Foam Energy Conservation) detects foam. The unit drains for a few minutes and returns to normal operation.
DRN/PROB BLOCK	Drain or probe block	The unit drains but the water level does not decrease, the humidifier has automatically shut off.
KLIXON OPEN	Klixon open	Temperature in the evaporation chamber exceeded the preset temperature of the high temperature switch.
PCB FUSE OPEN	PCB Fuse open	Internal 24vac is shorted.
24 VAC SHORTED	24 VAC Shorted	External 24vac (for humidity) controller is shorted or over loaded.
24 VDC SHORTED	24 VDC Shorted	Internal 24vdc (probe or fan) is shorted.
REFILL TIME OUT	Refill time out	Time to fill the evaporation chamber exceeded the preset time in the microprocessor.
WATR TMP DEFECTED	Water temperature defected	The water temperature sensor is not present or defective.
SSR OVER HEATED	SSR Overheated	The temperature of the SSR is too high. Verify the operation of the cooling fan.
INTERLCK OPEN	Interlock Open	Interlock safety is open. Humidifier is stopped.
END OF SEASON	End of season	When there is no humidity demand for a period of more than 72 hours, the humidifieir will drain the water from the evaporation chambers automatically and will stay into a stanby mode.

10.4. Programming mode

To enter into programming mode you just have to push the button at any time, to advance the program function to the next programming step in the menu push the same button twice.

Use the and buttons to choose from the proposed values or to change value.

Seq #	Display	Description	Values
01	CONTROL EXTERNAL	Selection of Control mode. If External is selected, the control demand will be received by the control input; if Com Port is selected, the control demand will be received by the communication port (BACnet option).	Internal or External or Com Port Default: External
01A	SP SOURC INTERNAL	Selection of the Set Point Source (Control Internal only). Selection of source for room humidity set point.	Internal or External or Com Port Default: Internal
01B	SETPOINT 40% RH	Selection of room relative humidity set point. (SP Source Internal only)	Percentage From 10 to 90%
01C	DUCT SRC DISABLE	Hi limit control mode. Selection of the source for the duct high limit relative humidity (Control Internal only).	Disable or External or Com Port Default: Disable
01D	DUCT SP 80% RH	Selection of high limit relative humidity set point. (Duct Source External only).	Percentage From 10 to 90%
02	DRAIN 8 HRS	Setting of automatic drain cycle of evaporation chamber. *Note: In general, harder the water is, more often the drain cycle should be. Drain cycle setting does not affect the AFEC system.*	From 1 to 24 hours Increment: 1 hour Default: 4 hours.
03	RUNNING 0645HRS	Number of running hours reading and reset To reset this counter: After service has been done, press simultaneously the and buttons for 30 seconds to reset the number of hours of operation to zero.	N/A
04	SERVICE 1000HRS	Hour span between services. *Note: In general, harder the water is, lower the number of hours of operation before service should be.*	From 400 to 1500 hours. Increment: 100 Default: 1000 hours.
05	LOCK ON 80% PWR	Selction of humidifier capacity reduction. *i.e.: In this case, the humidifier will deliver 80% of its maximum rated output when at full demand.*	From 00 to 100%. Increment: 1% Default: 100%
06	RESET ALRM NO	Reset of alarm To reset an alarm, press simultaneously the and buttons.	Yes or No Default: No

07	CTRL INP 2-10 VDC	Control signal input selection.	0-10VDC, 2-10VDC, 0-20mA or 4-20mA Default : 2-10VDC
08	HUM. INP 2-10 VDC	Humidity signal input selection.	0-10VDC, 2-10VDC, 0-20mA or 4-20mA Default : 2-10VDC
09	DUCT INP 2-10 VDC	Duct Humidity signal input selection.	0-10VDC, 2-10VDC, 0-20mA or 4-20mA Default : 2-10VDC
10	SKB 3XX NEP r1.5	Revision level of the program installed	N/A

Note:

1. Any changes made in the Program Mode are saved into a non-volatile memory.

10.5. User Adjustment & Diagnostic menu

To enter to User adjustment & diagnostic menu: Press simultaneously ★ (menu) and ▼ (down).

Seq #	Display	Type	Description	Value
01	SSR TmP 40 C	Reading	SSR Temperature reading	N/A
02	WTR TOFF 100 C	User adjustment	Water temperature offset user adjustment	Range: from -10˚C to +10˚C Default: **0**
03	WTR FREQ 8000 Hz	Reading	Water level frequency reading	N/A
04	WTR LOFF 100 %	User adjustment	Water level offset user adjustment	Range: from -10% to +10% Default: **0%**
05	FOAM PRB 207	Reading	Foaming probe value reading	N/A
06	Drn Tm Out 5 min	User adjustment	Drain time user adjustment	Range: from 4 to 16 min Default: **SK302/304/306: 5 min.** **SK310/314/320/330: 7 min** **SK340/360: 8 min.**
07	No Demnd 72 HRS	User adjustment	Delay to drain out the humidifier from its remains water when there is no demand, in order to prevent bacteria growth	Range: from 1 to 250 Hrs Default: **72Hrs**
08	Hold Tmp OFF	User adjustment	Holding temperature of the evaporation chamber for fast response to demand	Range: from 15 to 90˚C or OFF Default: **OFF**
09	Anti-Frz OFF	User adjustment	Anti freezing temperature for the evaporation chamber for humidifier to be installed in weather proof enclosure.	Range: from 4 to 10˚C or OFF Default: **OFF**
10	ALARM Beep ON	User adjustment	Alarm beep, to be selected ON or OFF	Range: ON or OFF Default: **OFF**
11	T Unit CELSIUS	User adjustment	Temperature unit scale Celsius or Fahrenheit	Range: Celsius or Fahrenheit Default: **Celsius**
12	CONTRAST 25	User adjustment	LCD Display contrast level	Range: from 0 to 40 Default: **25** (legible LCD)
13	SKB 3xx NEP r1.5	Reading	Model of humidifier and revision number of program installed.	N/A

11. Start up procedure

We recommend to strictly following this start-up procedure in order to avoid any anomaly resulting from wrong cleaning of the components.
In case of problem or discrepancy see section 14 – Trouble shouting guide.

1. Make sure that mechanical, electric and plumbing connection are done and secured.

2. Make sure that low voltage control circuit is done and correct.

3. Turn on the water shut off valve (outside of the humidifier) and check that the drain connections are connected to the main drain line of sufficient diameter.

4. Turn on the power to the humidifier from the circuit breaker disconnect. The POWER indicator should go on.

5. Press the front switch to the AUTO (I) position.

6. Perform a manual cleaning cycle.
   a) The fill cycle is activated automatically when the evaporation chamber does not contain water.
   b) When the FILL indicator is off, press the front switch to the DRAIN position.
   c) The DRAIN indicator will come on and the water fill drain forom the evaporation chamber.
   d) After 3 to 5 minutes when the evaporation chamber is empty, press the front switch to the AUTO position.
   e) Repeat steps a to d one more time to ensure proper cleaning of the evaporation chamber.

7. Your humidifier is now fully operational. The SK300 humidifier will produce steam upon demand from control(s).

12. Service

12.1. General

- The humidifier is set to give service demand on the alphanumeric display and on the CHECK light after is has reached the service hours setting (see section 10.4- Programming mode).
- The routine service is a cleaning of the evaporation chamber.
- We recommend setting the service demand depending on the water quality, the frequency of automatic drain cycles and the demand placed on the humidifier.
- The manual cleaning frequency can be from every 2 months to once a year.

12.2. Evaporation chamber cleaning

WARNING: RISK OF BURN. THE EVAPORATION CHAMBER AND ITS CONTENT CAN BE EXTREMELY HOT, CHECK TEMPERATURE BEFORE HANDLING.

1. Cool down evaporation chamber

- Set the front panel switch "AUTO/OFF/DRAIN" to DRAIN. The humidifier will command a drain cycle.
- Ensure that the evaporation chamber is completely empty. When it is empty, set the front panel switch "AUTO/OFF/DRAIN" to AUTO, the evaporation chamber will be fill with cool water; the FILL light will be illuminated.
- As soon as the evaporation chamber is full of cool water, the FILL light will extinguish, Set the front panel switch "AUTO/OFF/DRAIN" to DRAIN again.
- At the end of this drain cycle, check the temperature of the evaporation chamber, to do so, open the front door of the humidifier and touch the evaporation chamber with the back of your hand, If it is cool enough you can go the sequence #2 if not repeat the cool down operation until it will be cool enough.
- Set the front panel switch "AUTO/OFF/DRAIN" to OFF

2. *Shut down of the electrical supply*

CAUTION: RISK OF ELECTRIC SHOCK. SHUT DOWN THE ELECTRIC SUPPLY OF THE HUMIDIFIER

- Turn off the main power supply to the humidifier.

3. Disconnection of heating element(s)

- Remove the high voltage connector located at the top right hand side of the mechanical compartment.
  - Model SK302 to 306: Unscrew the connector.
  - Model SK310 to SK360: squeeze the locking ears of the high voltage connector and pull it apart.

4. Disconnection of the other accessories.

- Disconnect the connector from the water level sensor; this connector is attached to a cable that enters the mechanical compartment just below the high voltage connector. Squeeze the locking ear of the connector and pull it apart.
- Remove the connection to the high limit sensor (klixon), located on the top cover of the evaporation chamber.

5. Disconnection of steam hose and water pipe

- Remove the steam hose(s) at the top of the evaporation chamber.
- Remove the water drain/fill connection to the evaporation chamber. To do this, unscrew the nipple located on the lower right hand side of the evaporation chamber.

6. Removing the evaporation chamber

- The evaporation chamber may now be freely removed from the humidifier cabinet.
- **CAUTION**: The evaporation chamber still contains 1 inch of water, ensure that you do not reverse this water on yourself.
- Make sure that your footing is secure when lifting out the evaporation chamber. On large humidifier (SK340 and SK360) it may weigh more than 35 lb (15 Kg). This operation may require another person to assist you in removing the evaporation chamber.

7. Opening of the evaporation chamber

- Remove the cover from the evaporation chamber.
  - Model SK302 to 306: Unlatch the 3 latches located around the evaporation chamber, *caution: these latches are very tight, we recommend you to help you with a screwdriver or pliers to do this.*
  - Model SK310 to SK360: Turn the latches of the 4 or 8 latches located around the evaporation chamber.
- Remove the cover from the evaporation chamber.

8. Cleaning of the evaporation chamber

- Pour out any remaining water and scale that is on the bottom of the container
- To clean out the remaining scale from the container, use a stiff brush (synthetic filament only) and some vinegar or any weak acid for cleaning stainless steel.
- **WARNING**: The use of wire brush or any non-recommended acid will void the warranty.
- If the amount of scale to remove is very important, the service demand frequency is too low for the quality of supply water, you should then adjust this service demand frequency (see section 10.4 – Programming mode). Too much scale may impair the normal operation of the humidifier or damage it; in this case warranty will be voided.

9. Cleaning of the other components

- The components installed on the cover (heating element and water level sensor) and the cover itself should be cleaned as necessary, only if some scale has been accumulated on them.
- Proceed as per the cleaning of the container (step #8).
- Removing and cleaning of the water level sensor.
  A chamber protects the water level sensor. Cleaning of the sensor requires removing this chamber.
  - Unscrew the 2 screws holding the chamber, located on the cover.
  - Carefully remove the chamber, do not touch or damage the water level sensor.
  - Clean out the water level sensor by using a clean soft cloth.

  CAUTION: The water level sensor is covered by a thin lay of Teflon, any scratch or damage to this lay of Teflon may provoke failure of the humidifier.
  - Clean or the chamber by proceeding as per the main container (see step #8).
  - Re-attach the clean chamber to the cover and screw in the 2 screws on the top of the cover.

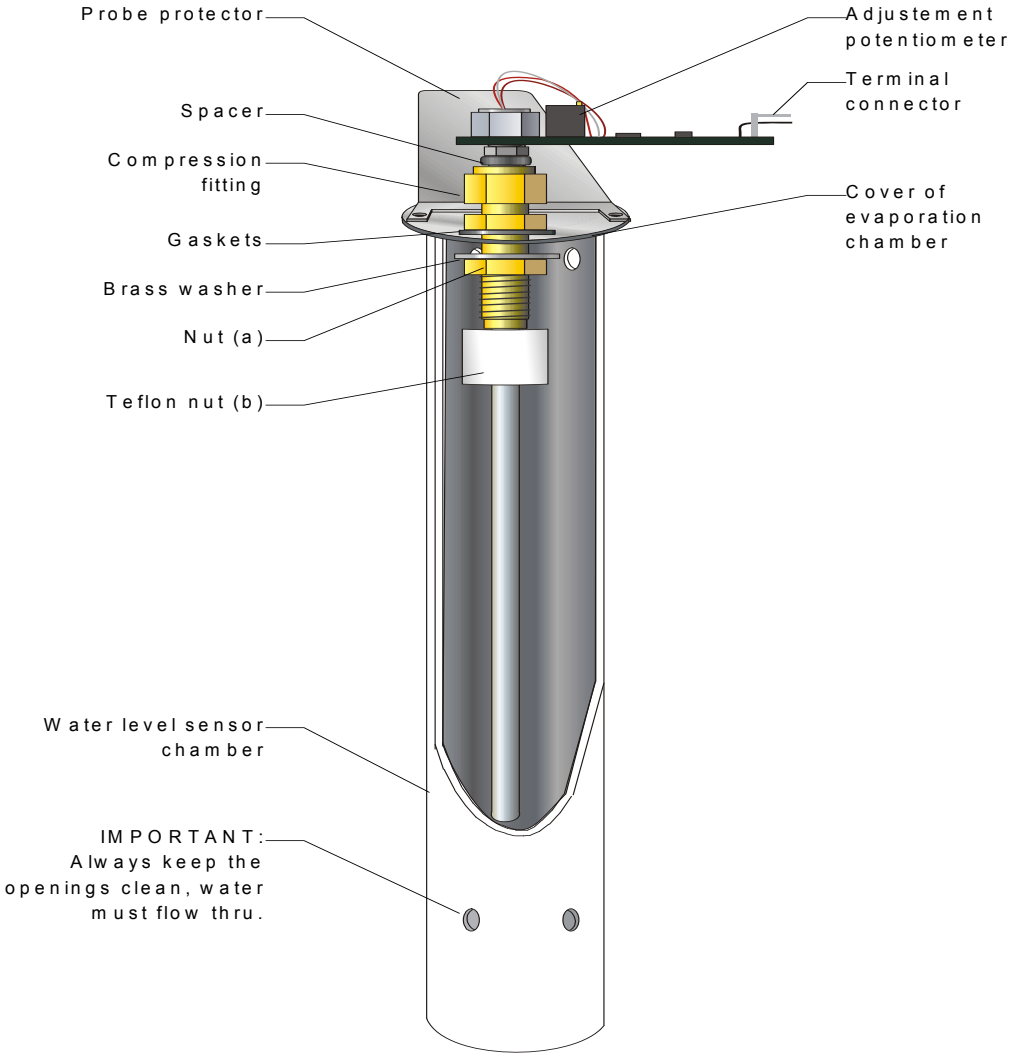

(Illus. 43)

10. Re assembly of the evaporation chamber

- Rinse out the container and the cover with water.
- Check the cover gasket, and make sure that the gasket is well placed before to re-install the cover on the container. The water level sensor should be in front of the drain/fill connection of the evaporation chamber.
- Tighten the latches around the cover (3,4 or 6).
- Replace the evaporation chamber in the humidifier.
- Tighten the water drain/fill connection nipple.
- Replace the steam hose(s) on the outlet of the evaporation chamber.
- Reconnect the connector of the water level sensor, high temperature switch (klixon) and the high voltage connector of the heating element.
  CAUTION: RISK OF FIRE. MAKE SURE THE HIGH VOLTAGE CONNECTOR IS PROPERLY LOCKED. AN UNPROPER CONNECTION MAY PROVOKE ELECTRIC ARCS.

11. Start-up of the humidifier

- Turn on the main power supply to the humidifier.
- The POWER light of the front panel should be illuminated.
- Press the button to enter the programming mode, to reset the Running hours (see section 10.4-Programming mode Step 3).
- Set the front panel switch "AUTO/OFF/DRAIN" to AUTO. The humidifier will command to fill the evaporation chamber with water; the FILL light should be illuminated.
  It is possible that the CHECK light will illuminate because the evaporation chamber is empty. This signal will extinguish as soon as the normal condition will be reach.
- If there is a humidity demand, the humidifier will produce steam again.

13. Exploded view & Bill of Material

13.1. Exploded view

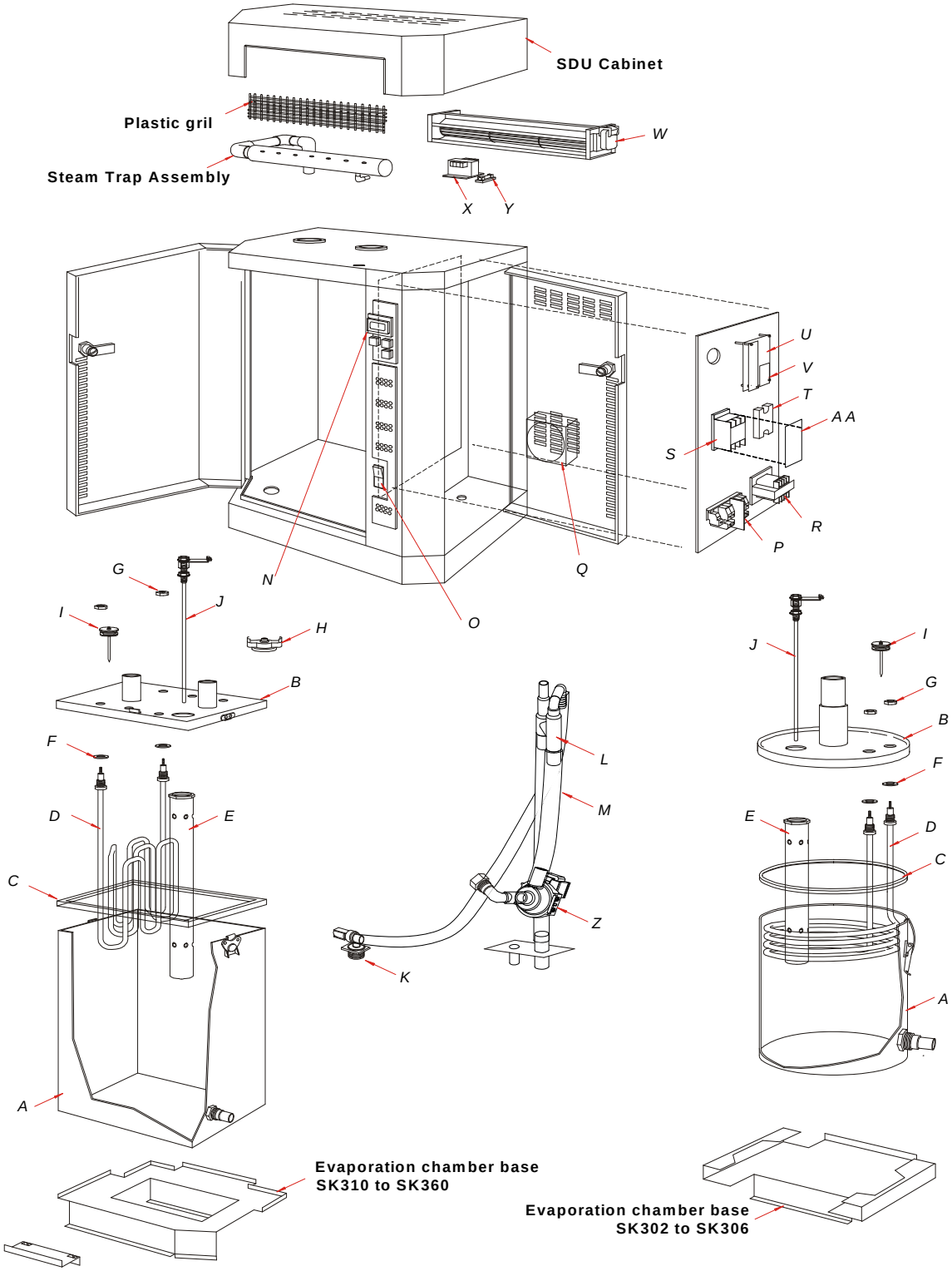

(Illus. 44)

13.2. Bill of material

Item	Description	Model	Part number
A	Container of evaporation chamber	SK302 to 306	SW CONTSMA-ASSY
		SK310 to SK330	SW CONTMED-ASSY
		SK340 & SK360	SW CONTLAR-ASSY
B	Cover of evaporation chamber	SK302 to 306 (1 phase)	SP 4018-M
		SK304 to 306 (3 phases)	SP 4019-M
		SK310 & SK314	SP 4183A
		SK320 & SK330	SP 4183B
		SK340	SP 4186
		SK360	SP 4185A
C	Evaporation chamber gasket	SK302 to 306	SP 1008
		SK310 to SK330	SP 1021
		SK340 & SK360	SP 1022
D	Heater element	See table below	
E	Level sensor chamber	SK302 to 306	SP 4196-M
		SK310/314/320/340	SP 4197-M
		SK330 & SK360	SP 4198-M
F	Washer (elements)	SK302 to SK360	SP 1005
G	S/S hex. Jam nut (elements)	SK302 to SK360	SP 2330
H	High temperature switch (klixon)	SK302 to SK360	SP 3035
I	Foam sensor	SK302 to 306	SW FOAMSM-ASSY
		SK310/314/320/340	SW FOAMMED-ASSY
		SK330 to SK360	SW FOAMLG-ASSY
J	Water level sensor	SK302 to 306	SW SK300BPROBSMA
		SK310/314/320/340	SW SK300BPROBMED
		SK330 & SK360	SW SK300BPROBMED
K	Water supply valve	SK302 to SK360	SP 6007
L	Fill and drain trap assembly	SK302 to 306	SW TRAPSMA-P
		SK310 to SK330	SW TRAPMED-P
		SK340 & SK360	SW TRAPLAR-P
M	Silicone tubing ½”	SK302 to SK360	SP 1023A
	Silicone tubing ¾”		SP 1023B
	PCV tubing ½”		SP 1027
N	Alphanumeric display	SK302 to SK360	NW SK300BDISPSS
O	"AUTO/OFF/DRAIN" rocker switch	SK302 to SK360	SW SKSWITCH-ASSY
P	Terminal block and high voltage connectors	SK302 to SK360	/
Q	Cooling fan	SK302 to SK360	SP 3007
R	Transformer	See table below	
S	Contactor	See table below	
T	Solid State Relay	50 A	SP 3102
		90 A	SP 3103
		125 A	SP 3105
U	Main printed circuit board	SK302 to SK360	NW SK300BMAIN-TES
V	BACnet interface printed circuit board	SK302 to SK360	NW SK300BBACNETSS
W	SDU fan	SDU I	SW FANSDU1-RET
		SDU II	SW FANSDU2-RET
		SDU III	SP 3010
X	Transformer	See table below	
Y	Fuse inside SDU	SDU I and SDU 2	SP 5105
		SDU 3	SP 5106
Z	Drain pump	SK302 to SK360	SP G4101

Model	**Voltage**	D Heater element	R Transformer	S Contactor	X SDU Transformer
SK302	240V/1~	SW 5932	SP 3310	SP 3029	SP 3312
	208V/1~	SW 5933	SP 3308	SP 3029	SP 3305
	480V/1~	SW 5934	SP 3321	SP 3029	SP 3329
	600V/1~	SW 5935	SP 3341	SP 3029	SP 3349
SK304	240V/1~	SW 5937	SP 3310	SP 3029	SP 3312
	208V/1~	SW 5940	SP3308	SP 3029	SP 3305
	208V/3~	SW 5924	SP3308	SP 3080	SP 3305
	480V/1~	SW 5941	SP 3321	SP 3029	SP 3329
	480V/3~	SW 5923	SP 3321	SP 3080	SP 3329
	600V/1~	SW 5942	SP 3341	SP 3029	SP 3349
	600V/3~	SW 5925	SP 3341	SP 3080	SP 3349
SK306	240V/1~	SW 5938	SP 3310	SP 3100	SP 3312
	208V/1~	SW 5943	SP3308	SP 3220	SP 3305
	208V/3~	SW 5933	SP3308	SP 3080	SP 3305
	480V/1~	SW 5944	SP 3321	SP 3029	SP 3329
	480V/3~	SW 5934	SP 3321	SP 3080	SP 3329
	600V/1~	SW 5945	SP 3341	SP 3029	SP 3349
	600V/3~	SW 5935	SP 3341	SP 3080	SP 3349
SK310	208V/3~	SW 5959	SP 3308	SP 3220	SP 3305
	480V/3~	SW 5958	SP 3321	SP 3080	SP 3329
	600V/3~	SW 5957	SP 3341	SP 3080	SP 3349
SK314	208V/3~	SW 5946	SP 3308	SP 3027	SP 3305
	480V/3~	SW 5947	SP 3321	SP 3080	SP 3329
	600V/3~	SW 5948	SP 3341	SP 3080	SP 3349
SK320	208V/3~	*	*	*	-
	480V/3~	SW 5950	SP 3321	SP 3100	SP 3352
	600V/3~	SW 5951	SP 3341	SP 3080	SP 3353
SK330	480V/3~	SW 5952	SP 3321	SP 3027	SP 3352
	600V/3~	SW 5939	SP 3341	SP 3220	SP 3353
SK340	208V/3~	*	*	*	-
	480V/3~	SW 5950	SP 3321	SP 3220 (2x)	-
	600V/3~	SW 5951	SP 3341	SP 3027	-
SK360	480V/3~	SW 5952	SP 3321	SP 3027 (2x)	-
	600V/3~	SW 5939	SP 3341	SP 3220 (2x)	-

* Available, please consult factory.

14. Trouble shouting guide

Problem	Indicator	Display	Causes	Corrective actions
Humidifier does not operate (Power Off)	Power: Off Check: Off Fill: Off Steam: Off Drain: Off	Blank display	• The humidifier is not powered. • Wires harnesses inside the humidifier are not secured properly.	• Check for the main power supply and fuses. • Check the transformer, the low voltage fuse. • Check the wires harnesses and the Main pc board.
Humidifier does not operate (Power On)	Power:Blink Check: Off Fill: Off Steam: Off Drain: Off	SKB 3XX NEP r1.0	• The rocker switch is at the OFF position. • Wire harness from the LED display panel to the Main pc board is not secured properly.	• Press the rocker switch to the AUTO position. • Check the white color wire harness. • Press the RESET button on the Main pc board.
Humidifier does not produce steam (No Demand)	Power: On Check: Off Fill: Off Steam: Off Drain: Off	DEMAND 0%	• Modulating unit: no analog signal. • On/Off unit: no demand from humidistat. • Control wires are not properly secured to the terminal blocks.	• Verify the setting of the humidistat. • Verify the connections of the wires to the control terminal blocks.
Humidifier does not produce steam	Power: On Check: Off Fill: Off Steam: Off Drain: Off	AIR FLOW OPEN	• Air flow is not detected by air pressure switch. • Control wires are not properly secured to the terminal blocks.	• Check the fan operation. • Verify the wires to the control terminal blocks #F & 2.
Humidifier does not produce steam	Power: On Check: On Fill: Off Steam: Off Drain: Off	HI LIMIT CUT-OUT	• High limit humidistat is open. • Control wires are not properly secured to the terminal blocks.	• Check the operation of the high limit humidistat. • Verify the wires to the control terminal blocks #F & 1.
No water inside the evaporation chamber Or Humidifier will not stop draining	Power: On Check: On Fill: On Steam: Off Drain: Off	NO LEVEL	• Humidifier is filling with water and has not reached or is not reaching the height of the water level sensor. • Humidifier is not filling with water.	• Verify if the drain valve is manually open. • Check if the shut off valve on the water supply line is open. • Verify the operation of the fill valve. • Check the fill valve strainer and the external strainer are not blocked.

Problem	Indicator	Display	Causes	Corrective actions
Humidifier is always on Foam cycle	Power: On Check: On Fill: On Steam: Off Drain: On	FOAMING CYCLE	• Excessive foaming condition inside the evaporation chamber. • Foaming sensor is grounded.	• Verify the quality of the supply water. • Verify if chemical products were used to clean the evaporation chamber during maintenance. Rinse with water the chamber properly. • Check the setting of the Drain cycle. Reduce the time between Drain cycles.
Humidfier is operating and the CHECK light is blinking	Power: On Check:Blink Fill: Off Steam: On Drain: Off	CLEANING REQUIRED	• The Running hours have exceeded the Service hours.	• Service the evaporation chamber, see section 12. • Reset the Running hours to cancel the blinking of the CHECK light, see section 10.4 STEP 3.
Humidifier is not operating and the CHECK light is ON	Power: On Check: On Fill: Off Steam: Off Drain: Off	OVER HEATED	• The electronic temperature sensor inside the water level sensor has sensed abnormal temperature.	• Verify if the humidifier was operating below the standard water level. Replace item J if necessary.
Humidifier is not operating and the CHECK light is ON	Power: On Check: On Fill: Off Steam: Off Drain: Off	PROBE DEFECTED	• The water level sensor is damaged.	• Replace the water level sensor, item J.
Humidifier will not drain and the CHECK light is ON	Power: On Check: On Fill: Off Steam: Off Drain: Off	DRN/PROB BLOCK	• During a Drain or Foaming cycle, the water level sensor has sensed the water level has not decreased.	• Verify the drain valve, the fill and drain water pipe connection, the water level sensor chamber are not obstructed. • Reset the Alarm see section 10.4 step #6
Humidifier does not operate and the CHECK light is ON	Power: On Check: On Fill: Off Steam: Off Drain: Off	KLIXON OPEN	• The high temperature switch has sensed abnormal temperature	• Verify if the humidifier was operating below the standard water level. Replace item J if necessary. • Press the manual reset to close the klixon.
Humidifier does not operate and the CHECK light is ON	Power: On Check: On Fill: Off Steam: Off Drain: Off	PCB FUSE OPEN	The internal 24vac of the humidifier was shorted.	• Verify the internal wirings and connections. • Replace the fuse.

Problem	Indicator	Display	Causes	Corrective actions
Humidifier is not operating and the CHECK light is ON	Power: On Check: On Fill: Off Steam: Off Drain: Off	24 VAC SHORTED	• External 24vac provided to the humidifier is shorted.	• Check the external wirings.
Humidifier is not operating and the CHECK light is ON	Power: On Check:On Fill: Off Steam: Off Drain: Off	24 VDC SHORTED	• The water level sensor or the cooling fan is shorted.	• Verify the connection of these two items. Replace the water level sensor, item J or the cooling fan, item Q if necessary.
Humidifier is not operating and the CHECK light is ON	Power: On Check: On Fill: Off Steam: Off Drain: Off	REFILL TIME OUT	• Time elapse between two refill is too long when humidifier is producing steam.	• Verify the water level sensor and water level chamber and clean if necessary. • Reset the Alarm see section 10.4 step #6
Humidifier is not operating and the CHECK light is ON	Power: On Check: On Fill: Off Steam: Off Drain: Off	WATR TMP DEFECTED	• Water temperature is defective.	• Verify the connection the water level sensor. Replace the water level sensor, item J if necessary.
Humidifier is not operating and the CHECK light is ON	Power: On Check: On Fill: Off Steam: Off Drain: Off	SSR OVER HEATED	• The temperature on the SSR is too high.	• .Verify the cooling fan is operational or if the air vents are free of dirts. Replace the cooling fan, item Q if necessary.
Humidifier does not produce steam	Power: On Check: Off Fill: Off Steam: Off Drain: Off	INTERLCK OPEN	• The interlock contact is open.	• Check the interlock switch. • Verify the wires to the control terminal blocks #F & 5.

1. General

Unless otherwise arranged, in writing, the acceptance of the Order Confirmation by the purchaser includes acceptance of the "General Conditions of Sale and Warranty" of National Environmental Products, Ltd hereafter referred to as NEP.

2. Incoterms

The international rules for interpretation of trade terms "Incoterms" as defined by the ICC Incoterms publication no. 460 from 1990, shall apply to the commercial terms used herein.

3. Confirmation of Order

- NEP shall not be deemed to have accepted an order until written "**Order Confirmation**" from NEP is issued to the purchaser.
- It is the responsibility of the purchaser to verify that all information concerning his/her order is correct and to notify NEP In writing, of any discrepancy prior to the order being shipped. In the event of a change or correction to an existing order, a second "Order Confirmation" will be issued by NEP.

4. Price

- Our prices are net, Ex-works Montreal in U.S. Currency, unless stated otherwise.
- Minimum orders shall be $50.00 minimum.
- Shipping and Handling charges are $5.00 minimum per order unless the shipment is billed to the purchaser's account or shipped freight collect.
- NEP reserves the right to adjust accepted prices in the event of alterations in rates of exchange, variations in costs of materials, changes in wages, interference on the part of the Government or similar conditions over which NEP has no control.

5. Payments terms

- Major credit cards, C.O.D., Prepayment.
- For open account, invoices are payable within 30 days from the date of invoice without no deduction, unless specify otherwise.
- An interest charge of 2% per month will be included on all overdue payments.
- No new order will be process if invoices are not paid within 45 days.

6. Transfer of ownership

The goods shall remain the property of NEP until the full payment for the goods has been received by NEP.

7. Delivery terms

- Shipments are Ex-works **400 Lebeau, St Laurent, Quebec, H4N 1R6, CANADA** unless notified otherwise.
- Unless special instructions, the order will be delivery in the way which NEP deems best without guaranteeing this to be the cheapest way of transport.
- For International Order, a written designation naming the freight forwarding agent is required and will remain in effect until notified otherwise.
- Any discrepancy, damage or breakage should be reported in writing both to NEP and to the Carrier within 5 working days from the receipt date.

8. Risk

From the moment of delivery, the purchaser shall bear all risks for the goods and NEP shall not be responsible for loss and damage incurred during transportation.

9. Delivery time

- Delivery time is stated approximately and depends on the product ordered, please allow a minimum of:
  a) 2 weeks for processing North American order.
  b) 6 weeks for processing International order.
- We will make every effort to adhere to our delivery promises, but will not accept order or contract cancellation or any liability for any direct or indirect losses that may arise for any reason whatsoever as a result of our failure to adhere to such promises.

10. Return of good

- Goods received by the purchaser cannot be returned unless a completed "**R.M.A. Form**" (Return Material Authorization Form) has been issued by NEP's **Customer Service.**
- Any returned goods must be sent to NEP 400 Lebeau, St Laurent, Quebec, H4N 1R6, CANADA, unless stated otherwise by the R.M.A. Form, accompanied with the completed "R.M.A. Form", the **R.M.A. number** shall be prominently displayed on the shipping box. Unauthorized returns will be refused.
- Any returned goods must be sent freight prepaid. Any goods that come to us freight collect will be refused and returned to sender unless previously agreed to by us in writing on the "R.M.A. Form".
- Goods returned for credit shall be in condition for resale in the original box and properly packaged. Units, accessories or components that have been installed are not returnable and not refundable.
  Credit is subject to an overhead charge of 30% of the invoice plus shipping & handling if returned within 30 days of the invoice date and 50% from 30 to 60 days.
- Non standard product (SK units with special feature), Multisteam manifolds and any DI unit are not returnable and not refundable.

11. Warranty

- Provided that the terms of payment are observed, the purchaser is offered a warranty of **24 months** from the original purchase date of delivery for any NEP's **standard product**, provided the equipment has been properly installed and operated in accordance with NEP instructions.
- The warranty covers faulty manufacture, design and/or defective materials and is limited to the equipment and components. The warranty shall cease to be valid in the event of misapplication, incorrect installation, **improper maintenance** or any other incorrect uses or misuse of the product.
- For the SK series, the warranty furthermore ceases to be valid if the user disconnects or removes any electronic or mechanical components prior disconnecting the input power. NEP assumes no responsibility for repairs made on equipment, unless performed by NEP's authorized personnel.
- The defective product or component shall be returned in accordance with the paragraph 10 (Returns of goods) as described in this document.
- NEP agrees under the warranty to repair or replace (at the discretion of NEP) such standard product or component, which upon examination by NEP are found to be defective.
- Product or component replaced or repaired under warranty will be sent back to the purchaser, standard freight paid by NEP
- Expenses in connection with travelling time, dismantling and mounting shall not be paid by NEP
- Guarantee for products or components sold but not manufactured by NEP, is only given to the same extent as given to NEP, however, not exceeding the normal NEP warranty.
- Parts used for repairs are warranted for the balance of the term of the warranty on the original humidifier or 90 days, whichever is longer.
- Any repair made, after the original warranty period, at the NEP facilities are warranted for 1 month from the date of repair.

12. Proper law and jurisdiction

This contract is and shall be deemed to have been made in the province of Quebec, CANADA, and shall in all respects, be governed by the province of Quebec laws.