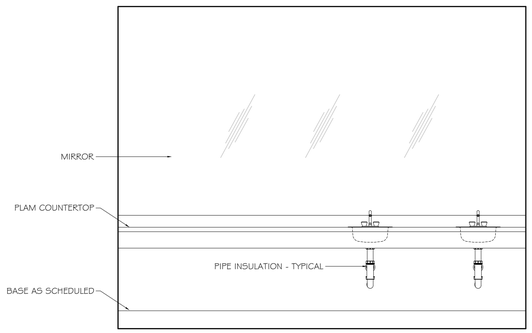

11 INTERIOR ELEVATION
SCALE: 1/2" = 1'-0"

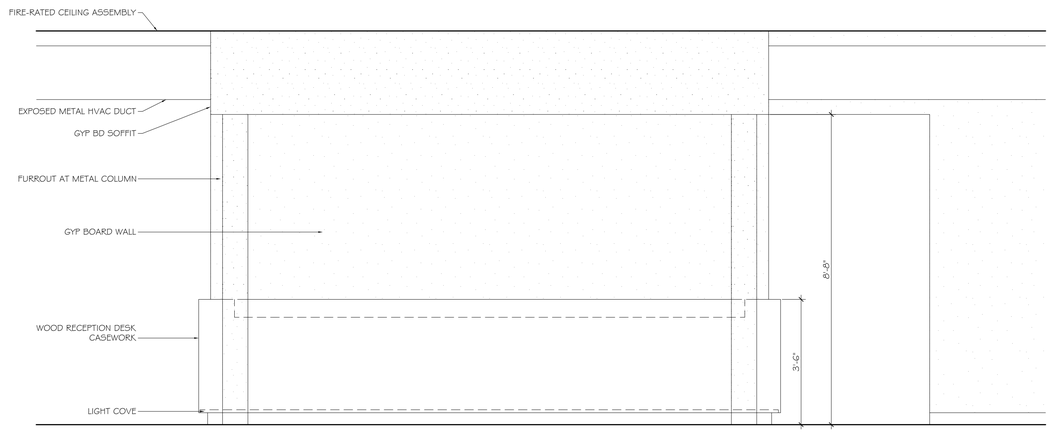

10 INTERIOR ELEVATION
SCALE: 1/2" = 1'-0"

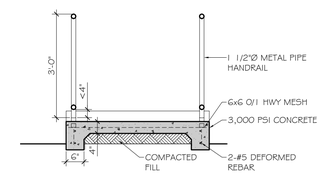

3 RAMP DETAIL
SCALE: 1/2" = 1'-0"

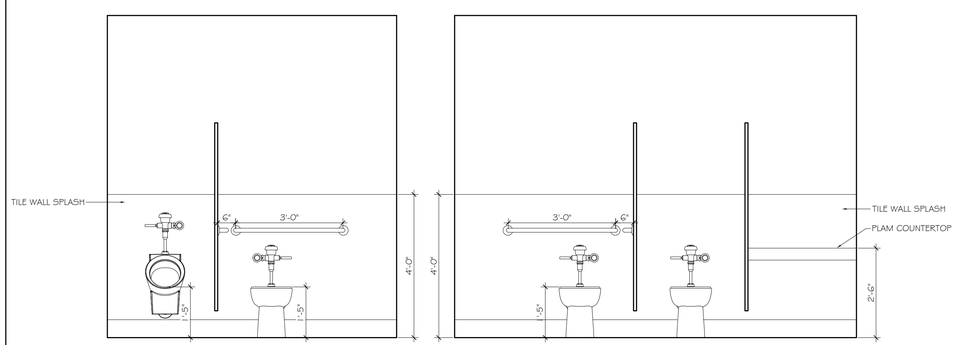

9 INTERIOR ELEVATION
SCALE: 1/2" = 1'-0"

8 INTERIOR ELEVATION
SCALE: 1/2" = 1'-0"

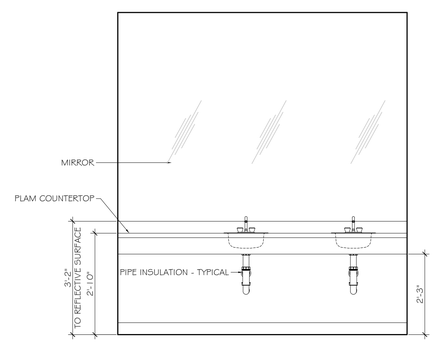

7 INTERIOR ELEVATION
SCALE: 1/2" = 1'-0"

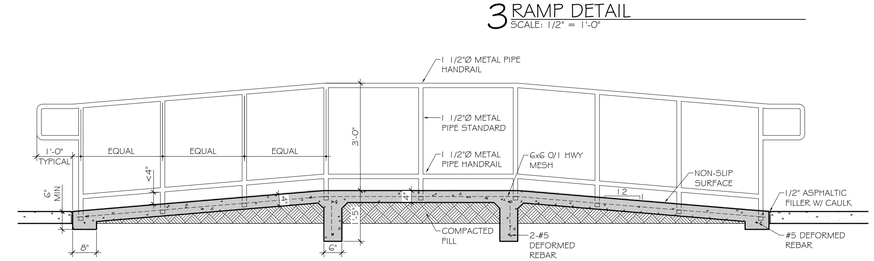

2 RAMP DETAIL
SCALE: 1/2" = 1'-0"

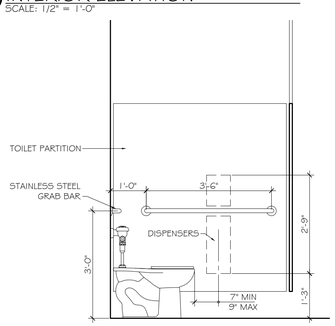

6 INTERIOR ELEVATION
SCALE: 1/2" = 1'-0"

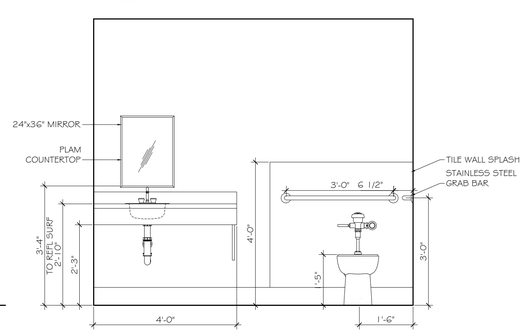

5 INTERIOR ELEVATION
SCALE: 1/2" = 1'-0"

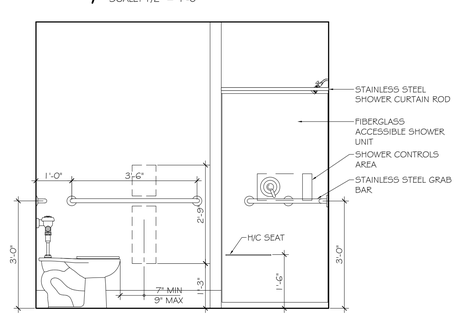

4 INTERIOR ELEVATION
SCALE: 1/2" = 1'-0"

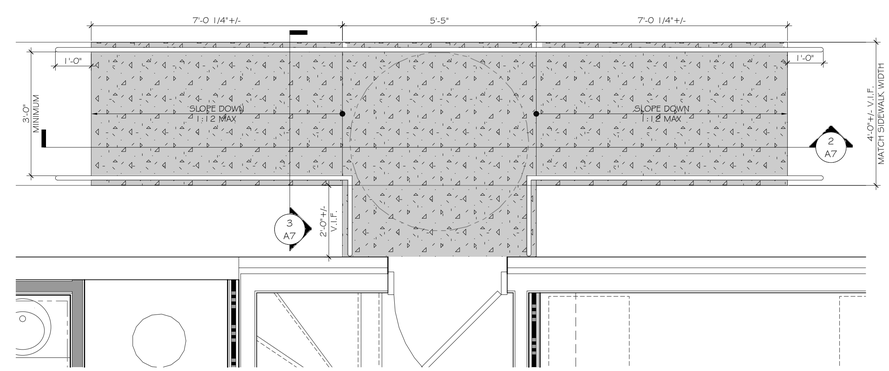

DAMMON ENGINEERING, INC.
Architects & Engineers

CHIEF ENGINEER: EMMETT DAMMON, P.E.
CHIEF ARCHITECT: KEVIN KINCHEN, NCARB
5141 ALDEN BRIDGE WAY
SUITE 100
SUDELL, LA 70458

dammoneng@dammon.net
dammoneng.com
PHONE: 985-649-5832
FAX: 985-641-5950

The above drawings and specifications, designs and arrangements contained herein, and all and no part thereof, are property of Dammon Engineering, Inc. and shall not be reproduced or copied, in whole or in part, or used in connection with any other work or project except by prior written agreement and authorization without written consent of Dammon Engineering, Inc. Visual contact with these drawings or specifications shall constitute conclusive evidence of acceptance of these restrictions.

BIKRAM YOGA STUDIO

8338 OAK STREET
NEW ORLEANS, LA 70118

JOB No:	2175	DATE:	6-7-2013
DRAWN BY:	BSN	CHECKED BY:	BSN

#	DESCRIPTION	DATE

REVISIONS

RAMP PLANS & DETAILS, INT. ELEV.

SHEET No: 9 of 14

A7