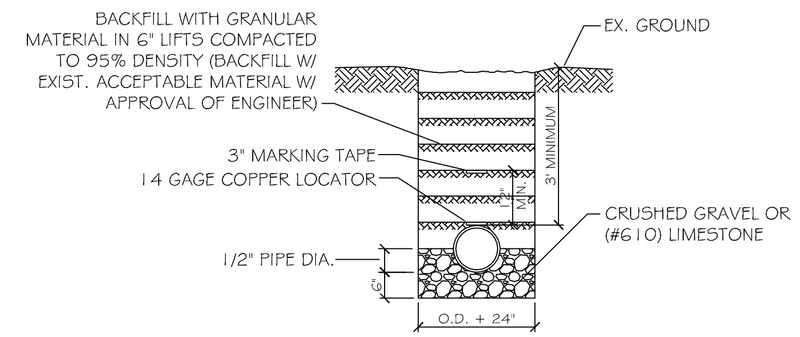

NOTE: A MINIMUM 10' HORZ. AND 18" VERT. SEPARATION (WITH WATER MAIN ON TOP)IS REQUIRED BETWEEN WATER AND SEWER LINES.

PIPE MAIN BEDDING DETAIL FOR SEWER AND WATER

SCALE: N.T.S.

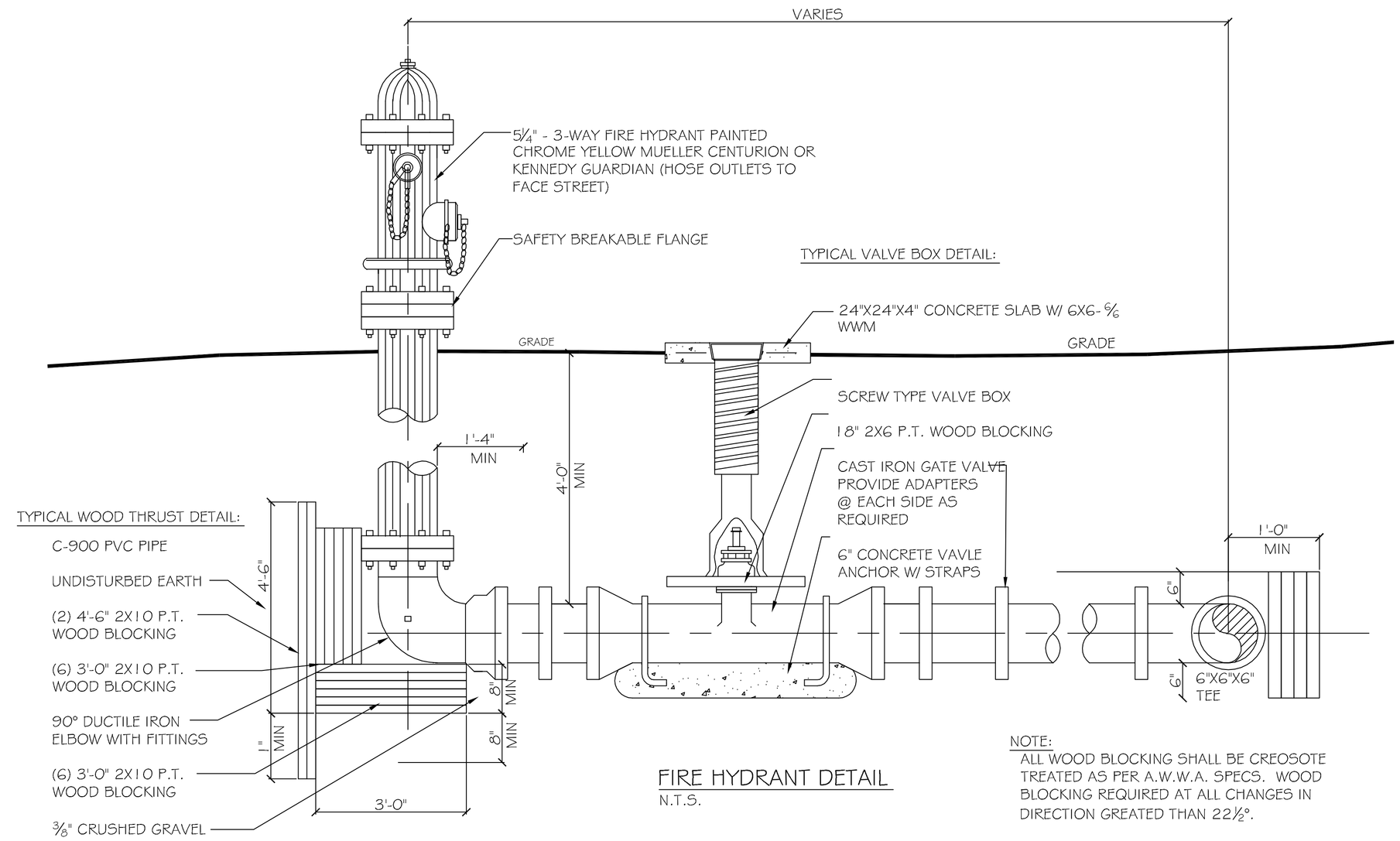

FIRE HYDRANT DETAIL

N.T.S.

NOTE:
ALL WOOD BLOCKING SHALL BE CREOSOTE TREATED AS PER A.W.W.A. SPECS. WOOD BLOCKING REQUIRED AT ALL CHANGES IN DIRECTION GREATED THAN 22½°.

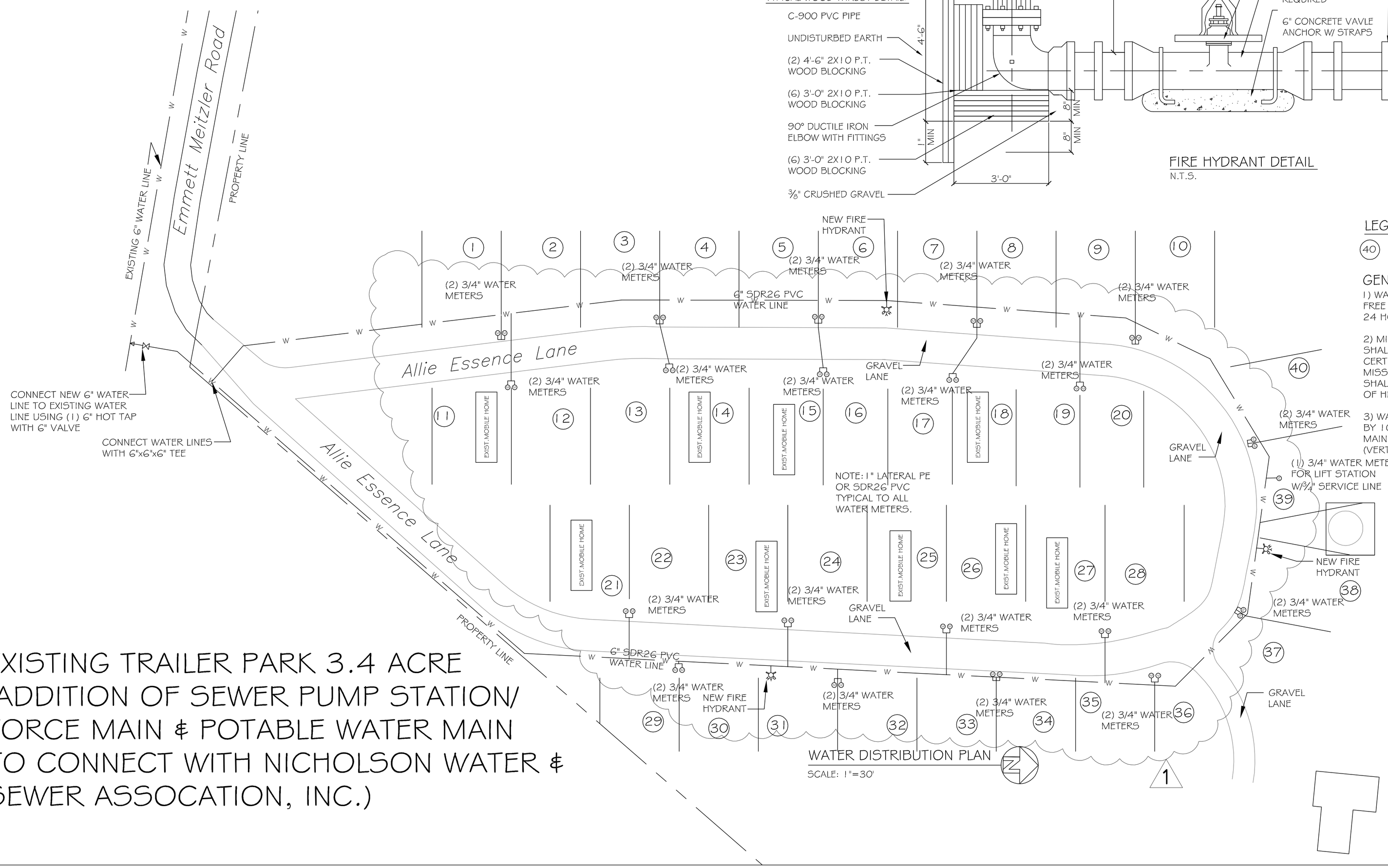

WATER DISTRIBUTION PLAN

SCALE: 1"=30'

LEGEND:

(40) DENOTES TRAILER COUNT

GENERAL NOTE:

1) WATER MAIN SHALL BE DISINFECTED USING A 50MG/L FREE CHLORINE RESIDUAL FOR A CONTACT TIME FOR 24 HOURS.

2) MICROBIOLOGICAL SAMPLES, FROM THE WATER MAINS SHALL BE COLLECTED BY THE REGISTERED ENGINEER, CERTIFIED OPERATOR OR A REPRESENTATIVE OF THE MISSISSIPPI STATE DEPARTMENT OF HEALTH. THE SAMPLES SHALL BE ANALYZED BY THE MISSISSIPPI STATE DEPARTMENT OF HEALTH OR A LABORATORY CERTIFIED BY THE STATE.

3) WATER MAIN SHALL BE SEPERATED FROM SEWER MAINS BY 10' WHEN RUNNING PARREL (HORIZONTALLY) AND WATER MAIN SHALL BE INSTALLED 18" ABOVE THE SEWER MAIN (VERTICALY).

EXISTING TRAILER PARK 3.4 ACRE (ADDITION OF SEWER PUMP STATION/ FORCE MAIN & POTABLE WATER MAIN TO CONNECT WITH NICHOLSON WATER & SEWER ASSOCATION, INC.)

AS-BUILT
07-5-16

DAMMON ENGINEERING, INC.
Architects & Engineers
dammonengineering.com
dammoneng@bellsouth.net
PHONE: 985-641-5932
FAX: 985-641-5950
CHIEF ENGINEER: BRIAN MISTICH, P.E.
CHIEF ARCHITECT: KEVIN KINCHEN
554 OLD SPANISH TRAIL
SLIDELL, LA 70458

The above drawing and specifications, design and arrangement of parts shown thereon are the property of Dammon Engineering, and no part thereof shall be copied, disclosed to others, or used in the execution of any work not specifically prepared for and by the Dammon Engineering, shall vitiate all fees payable thereunder and shall constitute an unlawful evidence of acceptance of these restrictions.

DREAMLAND MOBILE HOME PARK
ALLIE ESSENCE LANE
NICHOLSON, MISSISSIPPI

JOB No:	DATE: 05-19-2014
2182	
DRAWN BY: CKD	CHECKED BY: BM

REVISIONS

#	DESCRIPTION	DATE
1	RELOCATED WATER METERS CLOSE TO STREET	07-05-16

WATER DISTRIBUTION PLAN

SHEET No: 04 OF 04

C3