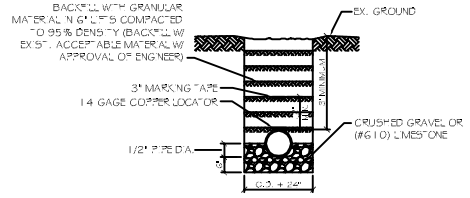

NOTE: A MINIMUM 10" HORIZ. AND 18" VERT. SEPARATION IS REQUIRED BETWEEN WATER AND SEWER LINES.

PIPE BEDDING DETAIL FOR SEWER AND WATER

SCALE: N.T.S.

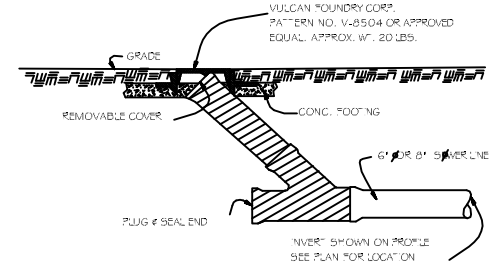

CLEANOUT DETAIL

N.T.S.

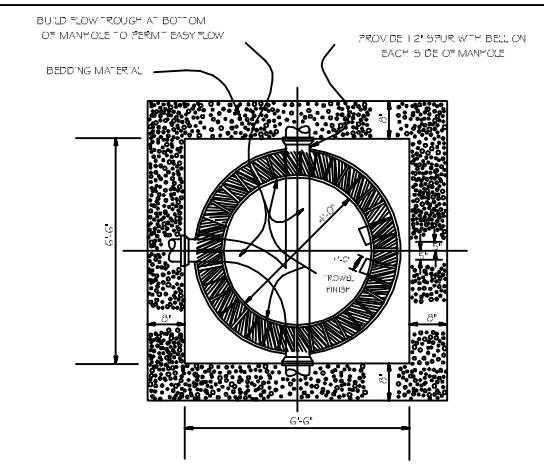

TYPICAL SEWER MANHOLE BOTTOM

N.T.S.

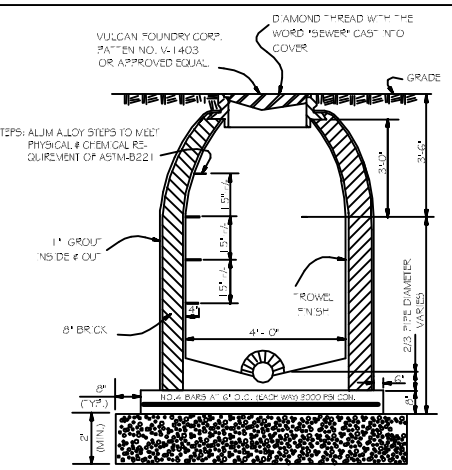

TYPICAL STANDARD SEWER MANHOLE

N.T.S.

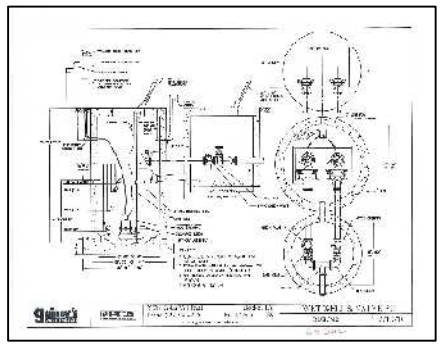

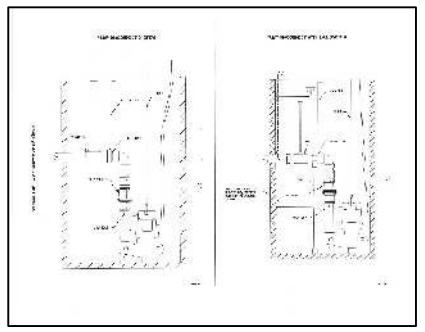

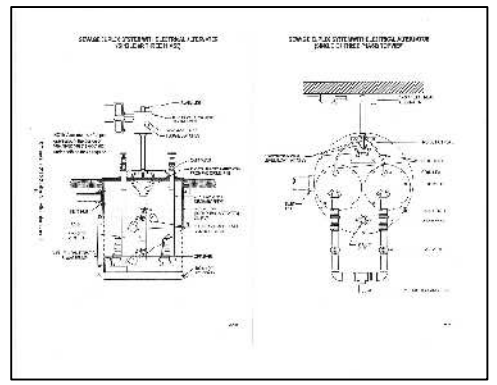

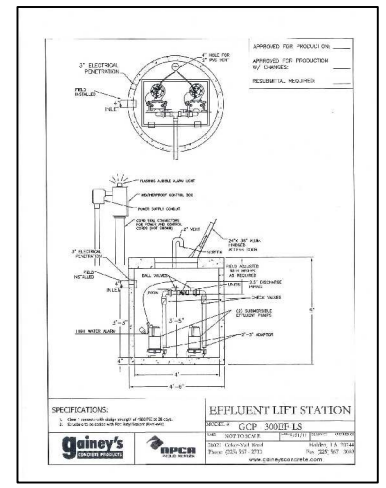

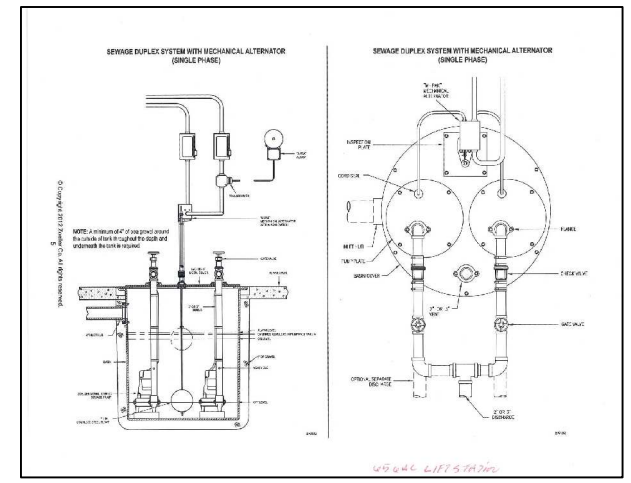

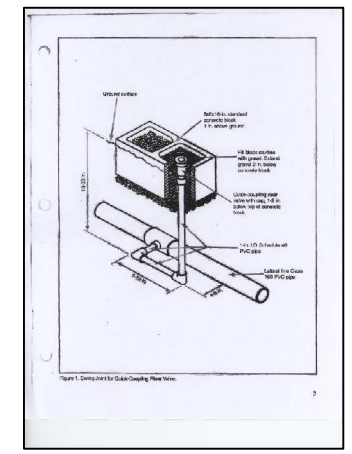

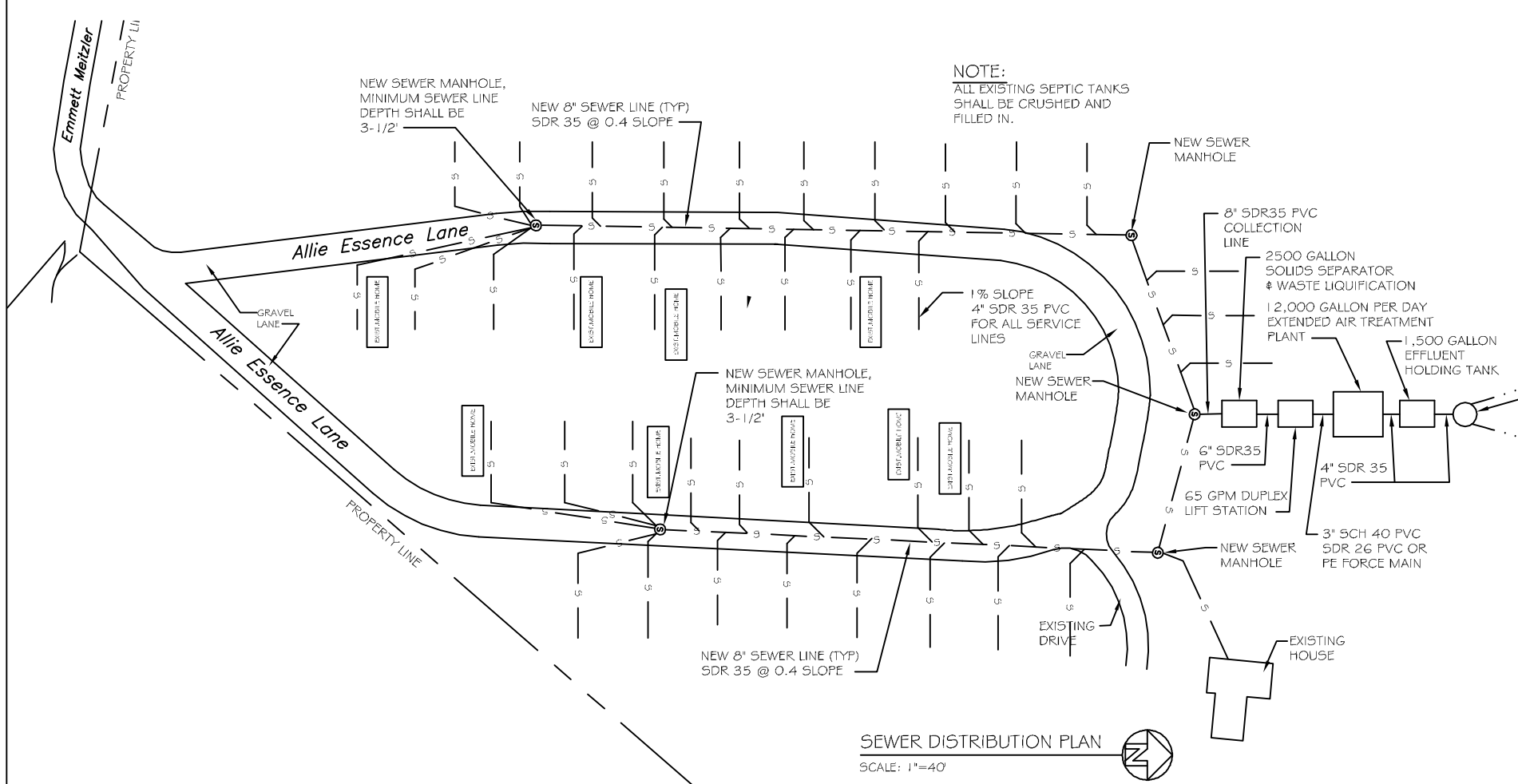

SEWER DISTRIBUTION PLAN

SCALE: 1"=40'

PRELIMINARY (NOT FOR CONSTRUCTION)

DAMMON ENGINEERING, INC.

dammoneng@cox.net
dammoneng@bellsouth.net
PHONE: 985-649-5032
FAX: 985-649-5950

CHIEF ENGINEER: EMMETT DAMMON, P.E.
554 OLD SPANISH TRAIL
SLIDELL, LA 70458

Dammon Engineering Reserves the rights to ownership of all designs, drawings, plans, specifications, and other documents prepared by Dammon Engineering. All reproduction, publication or other use of such documents without the express written consent of Dammon Engineering is prohibited. Ownership and rights to ownership remain with Dammon Engineering.

DREAMLAND MOBILE HOME PARK
SYSTEM UPGRADE & REHABILITATION

ALLIE ESSENCE LANE
NICHOLLS-N. MEEKER

JOB No:	2182
DATE:	08-06-2013
DRAWN BY:	JTL
CHECKED BY:	CD

#	DESCRIPTION	REVISIONS	DATE
-			

SEWER DISTRIBUTION PLAN

SHEET No: - OF -

C-2