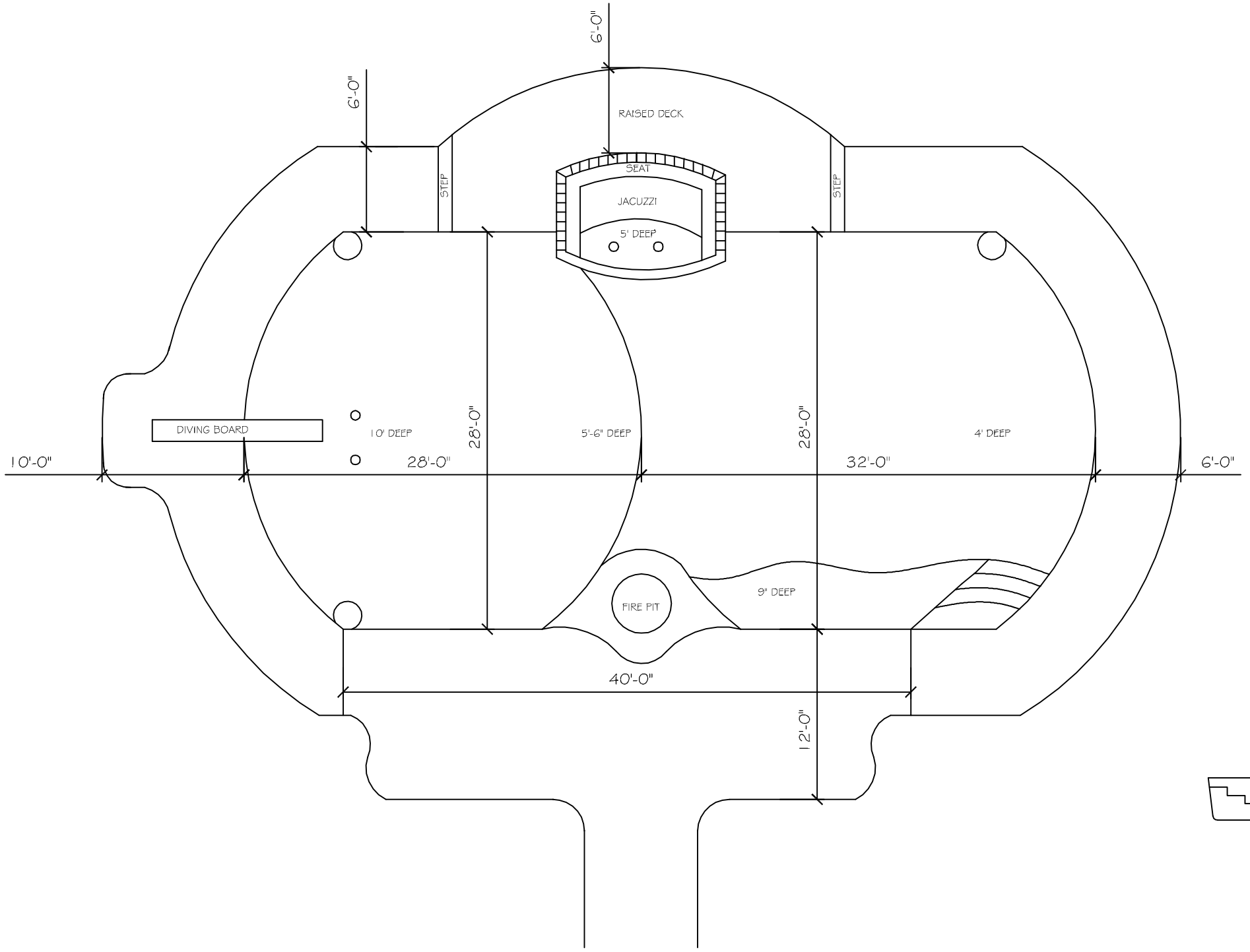

SITE PLAN

SCALE: 1/4"= 1'-0"

POOL: 1472 SQ.FT.
DEPTH: 4'-10"
GALLONS APPROXIMATELY 80,000
SUCTION AND RETURN PIPING = 2" PVC
POOL DECKING : 1,500 SQ.FT.

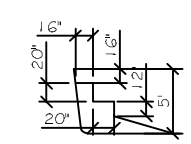

SPA STEP PROFILE

N.T.S.

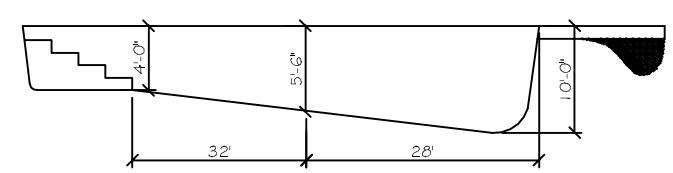

POOL PROFILE

N.T.S.

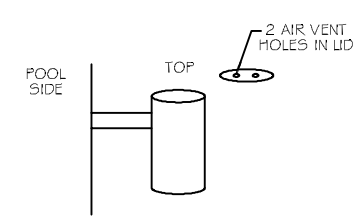

SKIMMER

N.T.S.

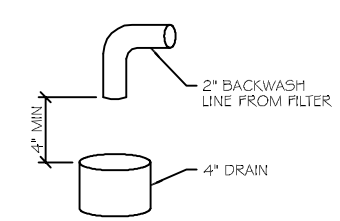

BACKWASH AIR GAP

N.T.S.

DAMMON ENGINEERING, INC
Architects & Engineers
dammoreengineering.com
dammoreeng@bellsouth.net
Phone: 985-641-8552
FAX: 985-641-5950

CHIEF ENGINEER: BRIAN M. STICH, P.E.
CHIEF ARCHITECT: KEVIN MOREN
544 OLD HOUMA BLVD.
SUITE D-2
HOUMA, LA 70360

These drawings & specifications are the property of Dammon Engineering, Inc. & shall not be used for any other work except by agreement with Dammon Engineering, Inc. Reproduction of these drawings & specifications without the written consent of Dammon Engineering, Inc. is prohibited.

AARON HALL
1150 CANE BLEEK
GRAY LA 70359

JOB No:	DATE: 09-09-2014
DRAWN BY: CKD	CHECKED BY: DPD

#	DESCRIPTION	DATE
	REVISIONS	

POOL SITE PLAN

SHEET No: 01 OF 01

C1