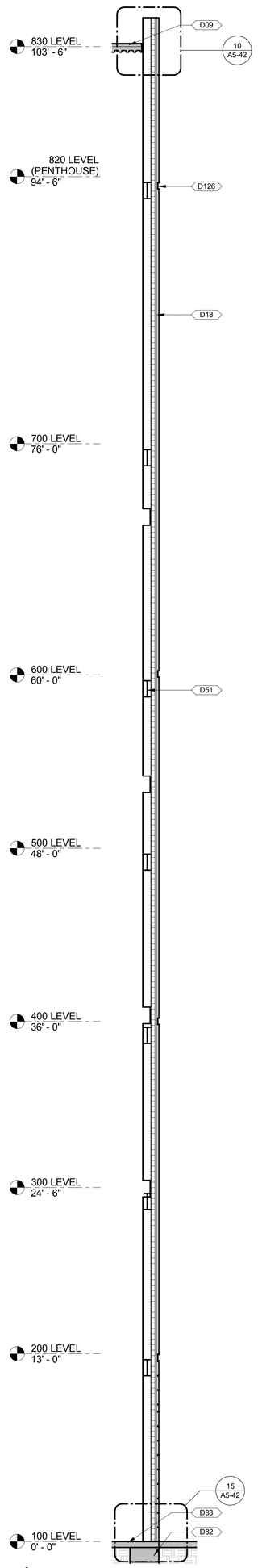

1 WALL SECTION
A5-7 1/4" = 1'-0"

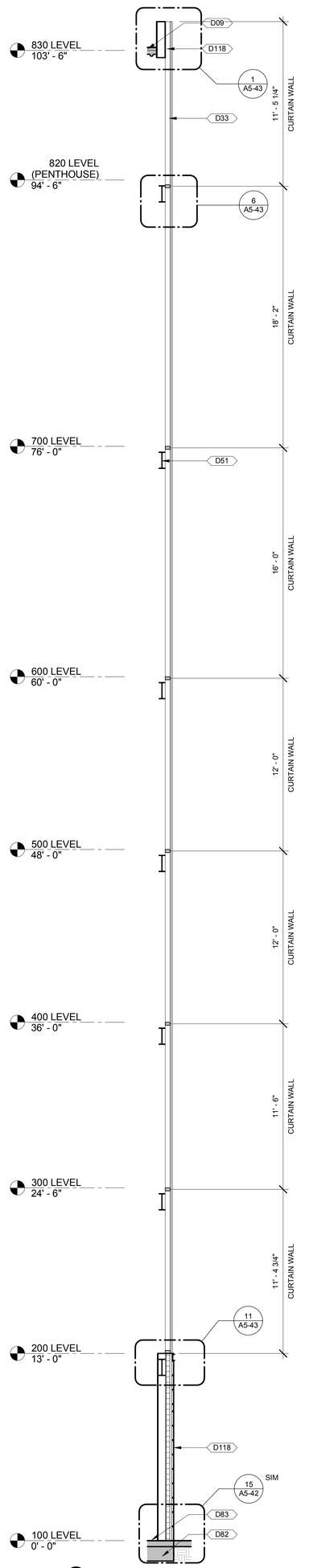

2 WALL SECTION
A5-7 1/4" = 1'-0"

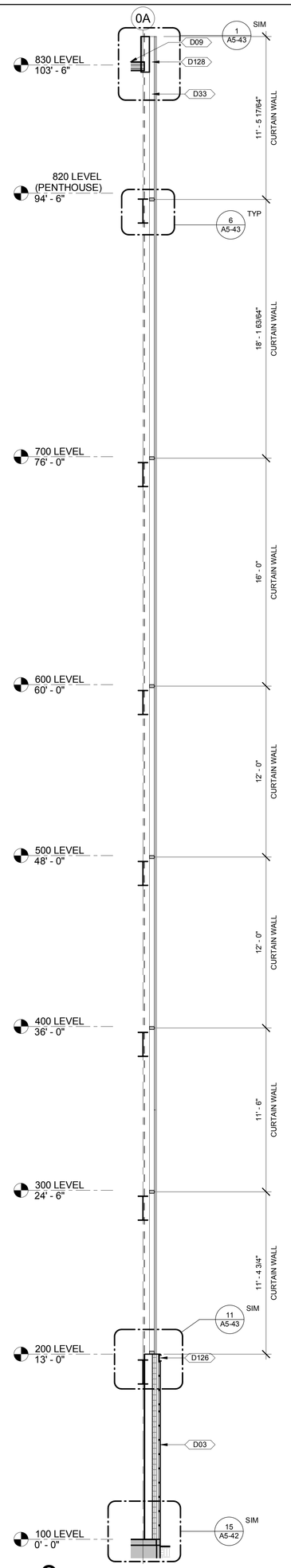

3 WALL SECTION
A5-7 1/4" = 1'-0"

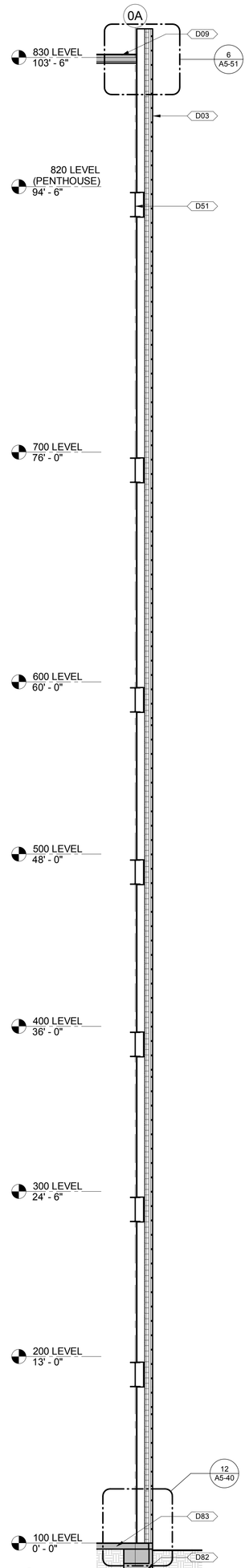

4 WALL SECTION
A5-7 1/4" = 1'-0"

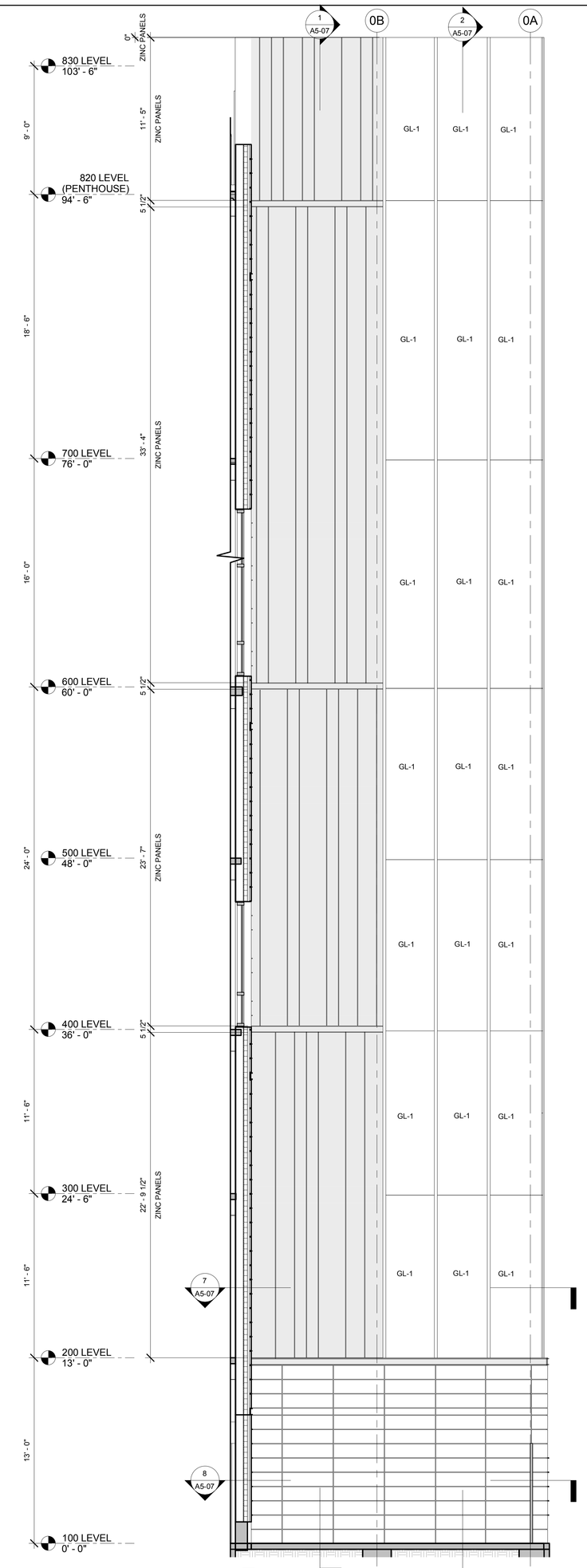

5 ENLARGED ELEVATION
A5-7 1/4" = 1'-0"

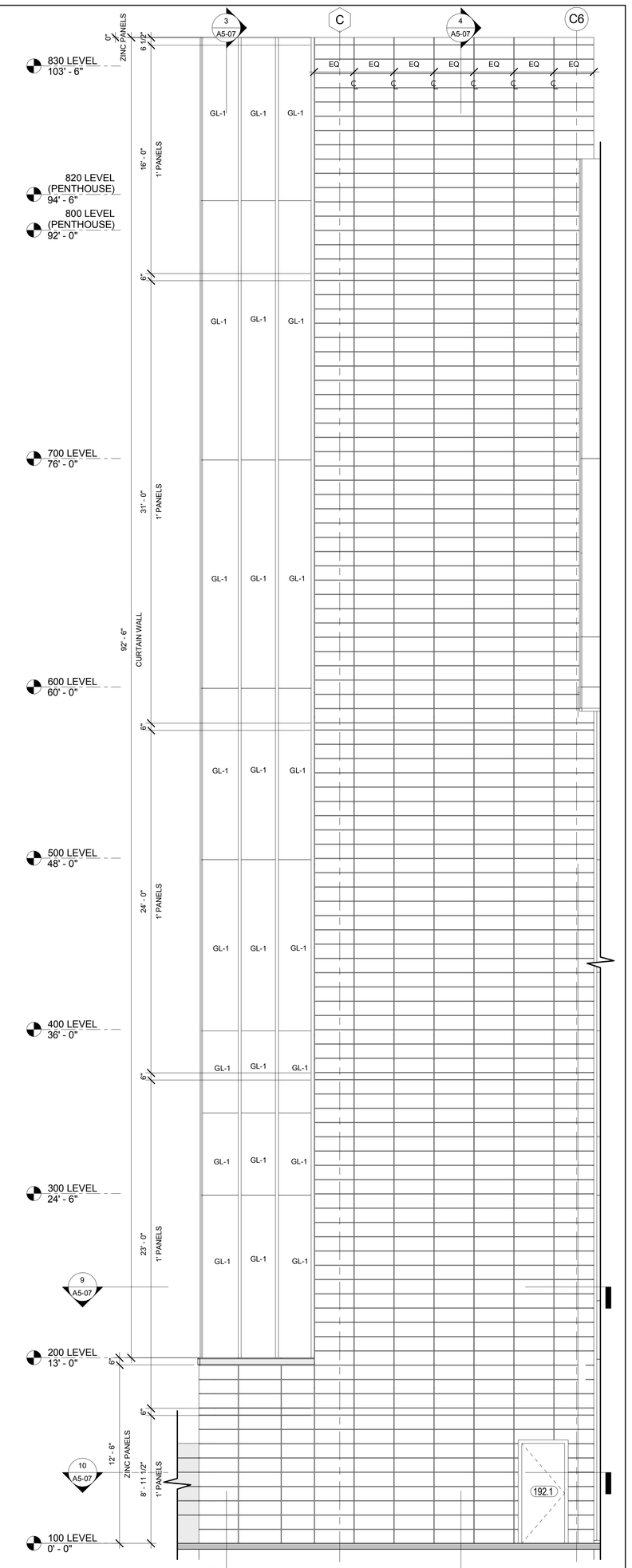

6 ENLARGED ELEVATION
A5-7 1/4" = 1'-0"

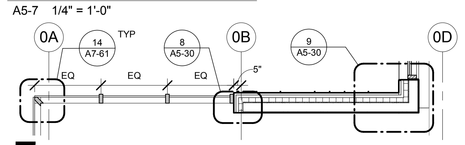

7 ENLARGED PLAN - 200-500 LEVEL
A5-7 1/4" = 1'-0"

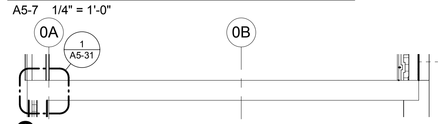

8 ENLARGED PLAN - 100 LEVEL
A5-7 1/4" = 1'-0"

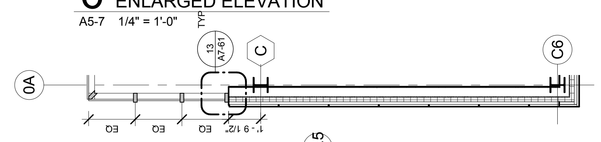

9 ENLARGED PLAN - 200-500 LEVEL
A5-7 1/4" = 1'-0"

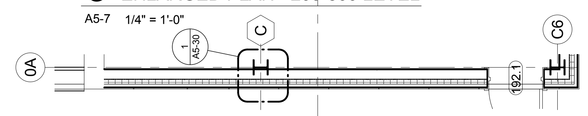

10 ENLARGED PLAN - 100 LEVEL
A5-7 1/4" = 1'-0"

KEYNOTE LEGEND	
D03	TERRA COTTA RAIN SCREEN SYSTEM
D09	ROOF DECK
D18	VERTICAL LOCK-SEAM ZINC-ALLOY WALL PANELS
D33	PREFINISHED ALUMINUM CURTAIN WALL SYSTEM
D51	STEEL FRAMING MEMBERS. SEE STRUCTURAL DRAWINGS.
D82	CONCRETE FOUNDATION. SEE STRUCTURAL DRAWINGS.
D83	CONCRETE SLAB EXTENSION

KEYNOTE LEGEND	
D118	STANDING SEAM ZINC-ALLOY METAL WALL PANELS RUN HORIZONTALLY
D126	ZINC BREAK METAL TRIM FORMED TO 6" CHANNEL PROFILE
D128	FIBER CEMENT WALL PANEL

No.	Date	Issue	No.	Date	Issue
1	12.23.10	SD PRICING SET			
2	01.18.11	100% SD SET			
3	05.18.2011	LNO Meeting			
4	09.15.2011	100% DD / PRICING			

Holabird & Root / Holly & Smith LLC expressly disclaims any responsibility arising from any unauthorized use of these plans, drawings and notes. Any authorization must be in writing.

This drawing copy may have been reproduced at a size different than originally drawn. The Owner and Architect assume no responsibility for use of incorrect scale. Drawings are not to be scaled.

Not published - All rights reserved.

HOLABIRD & ROOT
140 South Dearborn Avenue
Suite 500
Chicago, IL 60660
312.357.1771 (tel)
312.357.1909 (fax)
www.holabird.com

HOLLY & SMITH LLC
2302 Magazine Street
New Orleans, LA 70130
985.345.5210 (tel)
www.hollyandsmith.com

Project Number	15248.00
Drawn	JMH
Checked	NDF
Proj. Arch./Eng.	Approver

LOYOLA UNIVERSITY NEW ORLEANS

MONROE HALL RENOVATION

Project Name

ENLARGED DRAWINGS-SOUTH

Sheet Name

Drawing No. **A5-7**