| PANEL THICKNESS | BEARING PLATE |
|---|---|
| 5-1/2" - 7-1/4" | R 1/2"x13"x1'-1" |
| 7-1/2" - 8-1/2" | R 1/2"x13"x1'-2" |
| 8-3/4" - 11-1/4" | R 1/2"x13"x1'-5" |
| | |
| | |

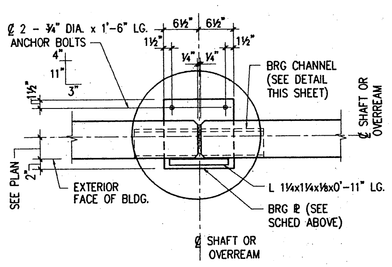


GROUT SOLID FROM TOP OF SHAFT TO BOTTOM OF PANEL EA. SIDE OF BEARING PLATE TYP.

## 1

¾"= 1'-0" U.N.O.

| PANEL THICKNESS | BEARING PLATE |
|---|---|
| 5-1/2" - 7-1/4" | R 1/2"x16"x1'-4" |
| 7-1/2" - 8-1/2" | R 1/2"x17"x1'-5" |
| 8-3/4" - 11-1/4" | R 1/2"x19"x1'-7" |
| | |
| | |

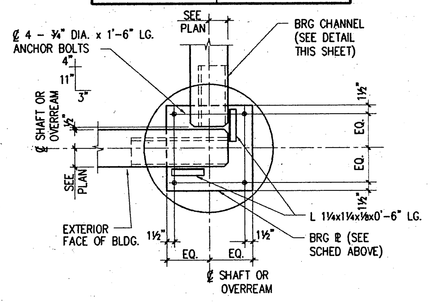


## 2

| BEARING CHANNEL SCHEDULE | | | |
|---|---|---|---|
| PNL SIZE | CHANNEL SIZE | PNL SIZE | CHANNEL SIZE |
| 5-1/2" | C6x8.2 | 8" | C8x11.5 |
| 6-1/4" | C6x8.2 | 8-1/2" | C8x11.5 |
| 6-1/2" | C6x8.2 | 8-3/4" | C9x13.4 |
| 6-3/4" | C6x8.2 | 9-1/4" | C9x13.4 |
| 7-1/4" | C7x9.8 | 11-1/4" | C12x20.7 |
| 7-1/2" | C7x9.8 | 12-3/4" | C12x20.7 |
| 7-3/4" | C8x11.5 | | |
| | | | |
| | | | |
| | | | |

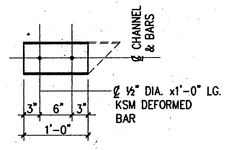


NOTES TO CONTRACTOR

1. PROVIDE 3" (MIN) CONC. COVER OVER ALL EEPOSED STEEL.
2. CHANNEL FLANGE TO BE FLUSH WITH EXTERIOR FACE OF PANEL.
3. NO SHIMS ALLOWED WITHOUT PRIOR APPOVAL OF STRUCTURAL ENGINEER.

## 4 TYPICAL BEARING CHANNEL DETAIL

NO SCALE

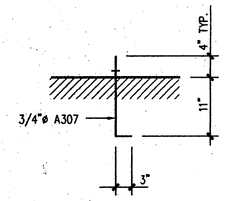


TYPICAL ANCHOR BOLT DETAIL

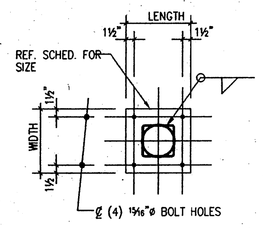


| BASE PLATE SCHEDULE | |
|---|---|
| COL. SIZE | BASE PLATE SIZE THK. x WIDTH x LENGTH |
| 5" STD. PIPE | 10" X 10" X ¾" |
| 6" STD. PIPE | 10" X 10" X ¾" |
| 8" STD. PIPE | 12" X 12" X ¾" |
| TS 5X5 | 10" X 10" X ¾" |
| TS 6X6 | 12" X 12" X 1" |
| TS 7X7 | 12" X 12" X 1" |
| TS 8X8 | 14" X 14" X 1" |
| W8 | 14" X 14" X 1" |

## 5 BASE PLATE AND ANCHOR BOLT DETAILS

NO SCALE

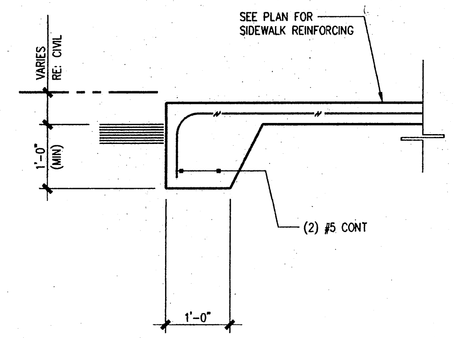


## 6

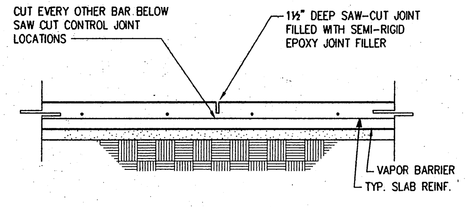


## TYPICAL CONTROL JOINT

NO SCALE

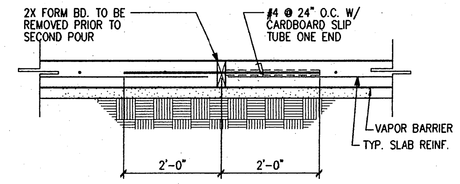


## 7 TYPICAL CONSTRUCTION JOINT

NO SCALE

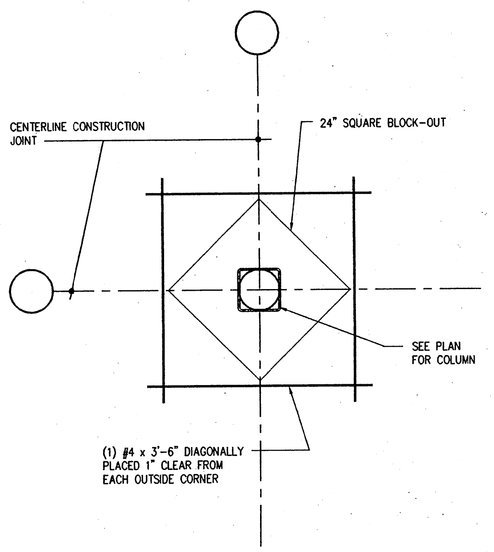


## 8 TYPICAL BLOCKOUT DETAIL

NO SCALE

| PANEL THICKNESS | BEARING PLATE |
|---|---|
| 5-1/2" - 7-1/4" | R 1/2"x13"x1'-1" |
| 7-1/2" - 8-1/2" | R 1/2"x13"x1'-2" |
| 8-3/4" - 11-1/4" | R 1/2"x13"x1'-5" |
| | |
| | |

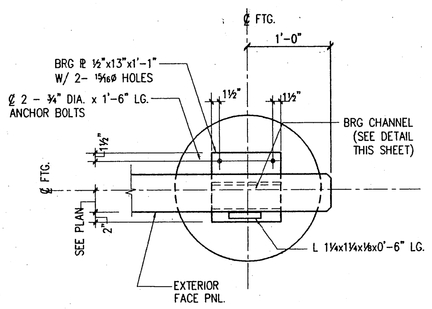


## 9

House Reh Burwell


Glenn C. House, Jr. AIA
Edward M. Reh, Jr. AIA
William M. Burwell AIA

811 Rusk Street
Suite 101
Houston, Texas 77002
713-227-0811
713-227-0812 fax

HAYNES WHALEY ASSOCIATES, INC.
Structural Engineering
Houston, Texas
Reston, Virginia
HWA# 95-315-00


STATE OF TEXAS
LARRY E. WHALEY
3-13-96

Owens & Minor Medical, Inc.

HRBA# 95079

Issues / Revisions

| | |
|---|---|
| FOUNDATION PERMIT | 22 January 1996 |
| ISSUE FOR PERMIT | 20 Febuary 1996 |

S3.1

PLOT SCALE: 1:16
PLOT DATE: 14-MAR-96
CAD FILE: 95315S3.DWG