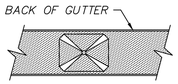

FIELD CUT TOP OF DOWNSPOUT TO FIT BEVEL OF GUTTER. USE DOWNSPOUT AS TEMPLATE TO MARK BOTTOM OF GUTTER. DRILL 3/8"ø HOLE IN GUTTER AND FIELD CUT AS SHOWN. BEND TABS DOWN AND ATTACH THE DOWNSPOUTS WITH (3) TRIM FASTENERS.

DOWNSPOUT ATTACHMENT

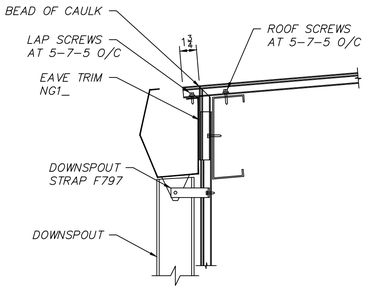

SECTION AT DURA-RIB WALL

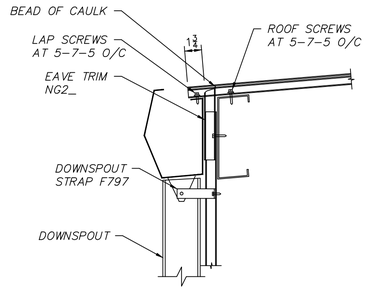

SECTION AT STARMARK WALL

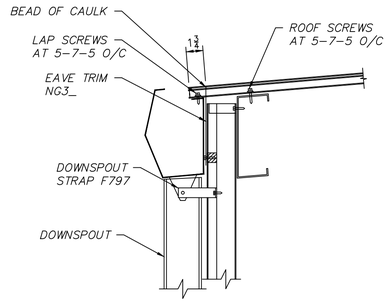

SECTION AT 3" WALL

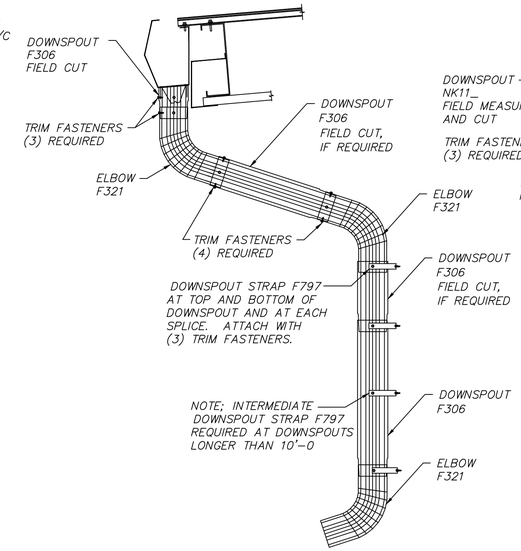

STANDARD DOWNSPOUT DETAIL
AT CANOPY

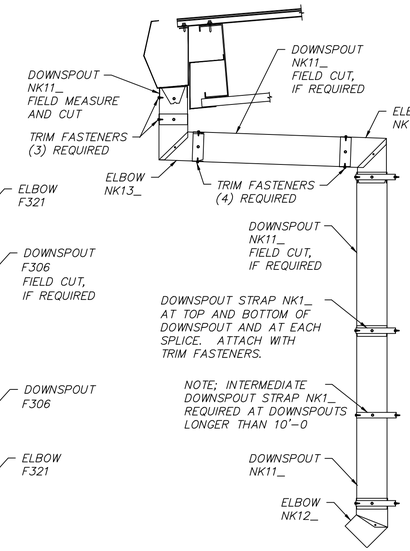

ALTERNATE DOWNSPOUT DETAIL
AT CANOPY

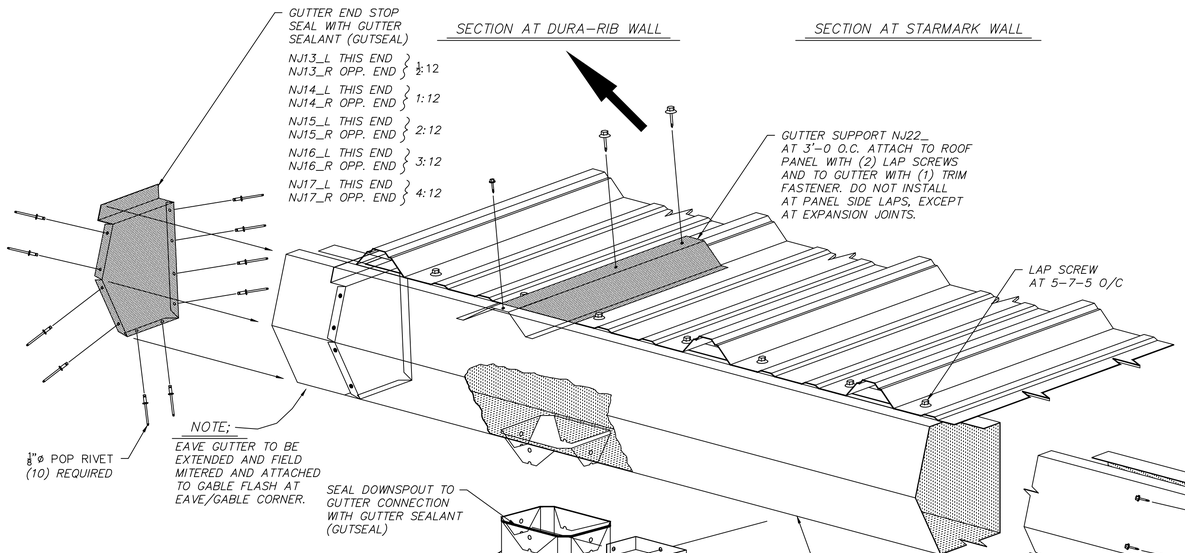

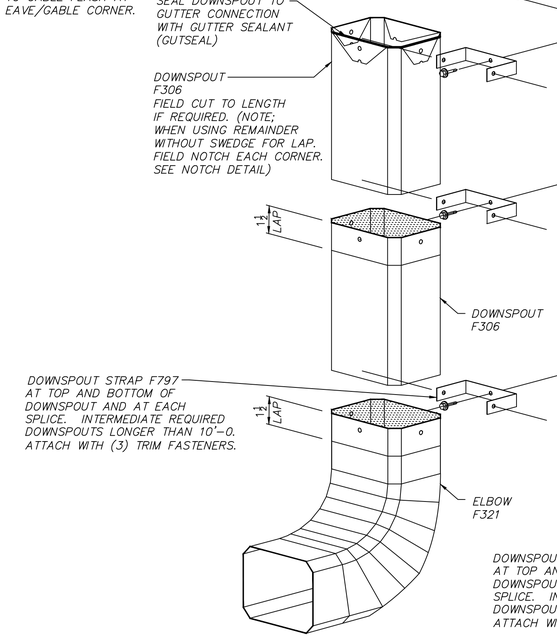

STANDARD DOWNSPOUT

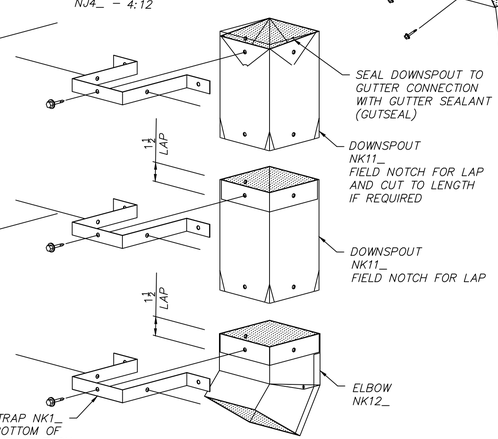

ALTERNATE DOWNSPOUT

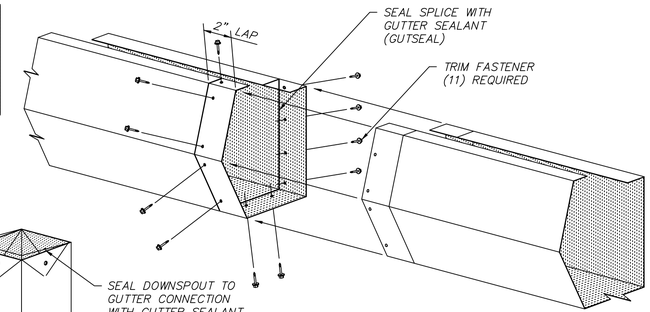

SPLICE DETAIL

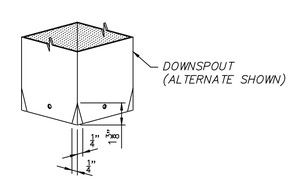

DOWNSPOUT NOTCH DETAIL

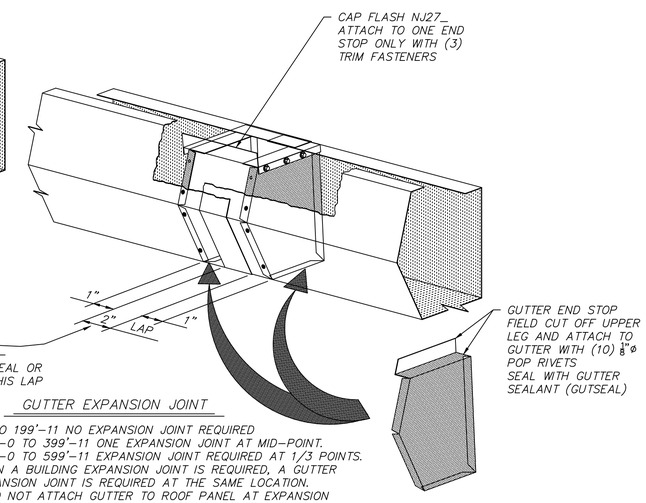

NOTE
DO NOT SEAL OR FASTEN THIS LAP

GUTTER EXPANSION JOINT

0" TO 199'-11 NO EXPANSION JOINT REQUIRED
200'-0 TO 399'-11 ONE EXPANSION JOINT AT MID-POINT.
400'-0 TO 599'-11 EXPANSION JOINT REQUIRED AT 1/3 POINTS.
WHEN A BUILDING EXPANSION JOINT IS REQUIRED, A GUTTER EXPANSION JOINT IS REQUIRED AT THE SAME LOCATION.
* DO NOT ATTACH GUTTER TO ROOF PANEL AT EXPANSION JOINT. GUTTER SUPPORTS SHOULD BE LOCATED AT EACH SIDE OF EXPANSION JOINTS.

NOTE:

(1) STAR TRIM PARTS ARE PROVIDED IN NOMINAL LENGTHS AND MAY REQUIRE TO BE FIELD CUT TO LENGTH AND THE REMAINDER USED AT A DIFFERENT LOCATION.

(2) ROOF AND WALL PANELS SHOULD BE CLEANED OF ANY DRILL SHAVINGS OR FIELD CUTTING FILINGS AT THE END OF EACH DAY TO PREVENT RUSTING OF THESE PARTICLES.

Revision	Date	Description	By	Ck'd

STAR BUILDING SYSTEMS
An NCI Company
P.O. BOX 94910
OKLAHOMA CITY, OK 73143
(405) 636-2010

Customer:
CASEY CIVIL LLC
COMMERCIAL
MANDEVILLE, LA

Project Name & Location:
PINNACLE CASINO –
MANHATTAN CONSTRUCTION
BATON ROUGE, LA

Drawing Status:
☐ Preliminary (Not For Construction)
☐ For Approval (Not For Construction)
☐ For Construction Permit
☒ For Erector Installation

Scale: NOT TO SCALE
Drawn by:
Checked by:
Project Engineer:
Job Number: 12-B-63841
Sheet Number: R5 of 10

The engineer whose seal appears hereon is an employee for the manufacturer for the materials described herein. Said seal or certification is limited to the products designed and manufactured by manufacturer only.The undersigned engineer is not the overall engineer of record for this project.

CONVEX EAVE
GUTTER DETAILS
DURA-RIB ROOF

45.06.05

03/15/10