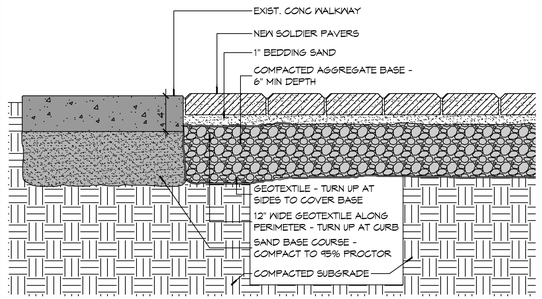

2 WALKWAY DETAIL
SCALE: 1 1/2"=1'

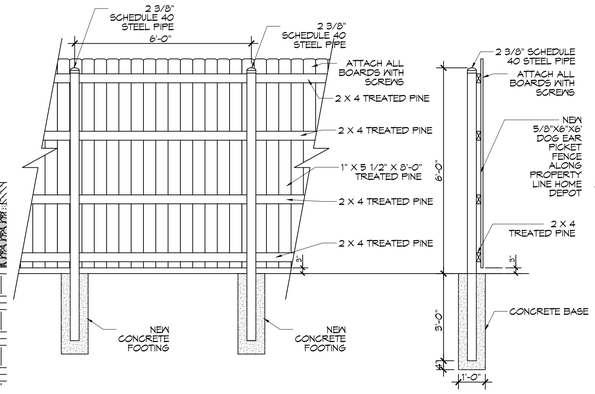

3 SIX FOOT FENCE DETAIL
SCALE: 3/8" = 1'-0"

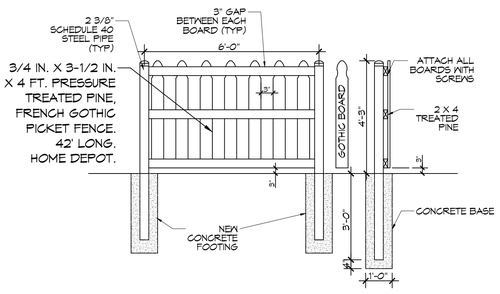

4 FOUR FOOT FENCE DETAIL
SCALE: 3/8" = 1'-0"

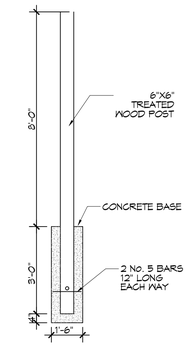

5 LIGHT POLE
SCALE: 3/8" = 1'-0"

GENERAL NOTES

1. SIDEWALK RADII DIMENSIONS ARE TO SIDEWALK CENTERLINE UNLESS NOTED OTHERWISE.
2. CENTER POINT FOR RADII ARE IDENTIFIED AS WORKPOINT (WP).
3. MAXIMUM SIDEWALK INCLINE SHALL NOT EXCEED 5%.
4. WHERE CROSS SLOPE OCCURS, SLOPE SHALL NOT EXCEED 5% AND SLOPE IN THE DIRECTION OF ROBERT STREET.
5. SLOPE PROFILE OF NEW SIDEWALK SHALL CONFORM TO EXIST ADJACENT GRADE ELEVATIONS AT ENDS OF FORMS PROVIDED THAT SLOPE CONFORMS TO NOTE 3.
6. CONTRACTOR SHALL FIELD VERIFY EXISTING LANDMARKS, LOCATIONS, CONDITIONS PRIOR TO CONSTRUCTION AND NOTIFY ARCHITECT WHERE ANY DISCREPANCIES WITH CONSTRUCTION OCCUR.
7. ALL DIMENSIONS ARE ±.

BRICK COUNT

4"X8" ENGRAVED TILE BRICKS - 2,804 ±

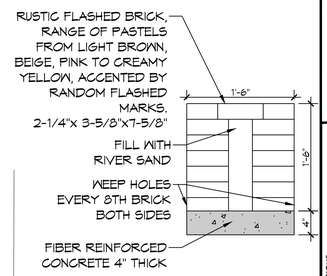

6 BRICK BENCH SEAT
SCALE: 1" = 1'-0"

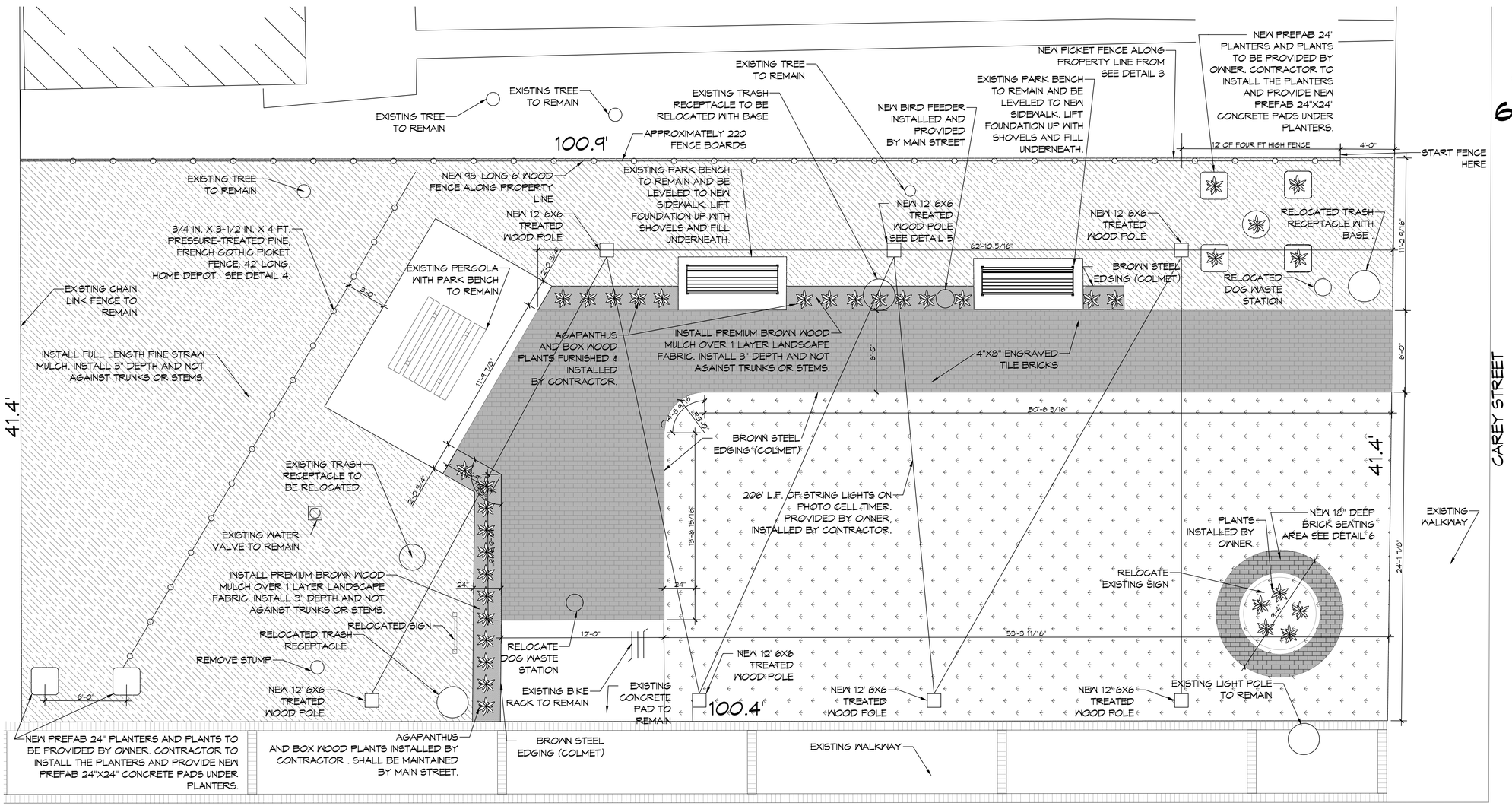

1 SITE PLAN
SCALE: 1/4"=1'-0"

DAMMON ENGINEERING, INC.
LOUISIANA & MISSISSIPPI
www.dammoneningeering.com
info@dammoneningeering.com
PH: 985.649.5832
Chief Engineer: Brian Mistich, PE
5142 Cypress Trail
Slidell, LA 70458

#	DESCRIPTION	DATE

REVISIONS

SEAL:

PARK IMPROVEMENT
MAIN STREET
SLIDELL
2302 CAREY ST.
SLIDELL, LA. 70458

JOB No: 2024	DATE: 08-02-2024	DRAWN BY: CKD	CHECKED BY: CKD

THIS DOCUMENT, THE PROPERTY OF DAMMON ENGINEERING, INC. AND THE INFORMATION CONTAINED THEREIN, IS PROVIDED FOR, AND MAY BE USED ONLY FOR, THE SITE AND PROJECT SPECIFIED IN THE CONTRACT FOR ENGINEERING SERVICES. NO OTHER USE, REPRODUCTION, OR DISTRIBUTION IS PERMITTED WITHOUT THE WRITTEN CONSENT OF DAMMON ENGINEERING, INC.

SHEET TITLE:
PARK IMPROVEMENTS

DRAWING NUMBER:
C100

SHEET No: 1 of 1

FILE NAME: J:\+ Common\Work Sheet Stash\Current Drawings\C100 - Site Plan.dwg DLOT DATE & TIME: Friday, August 2, 2024 8:53:08 AM