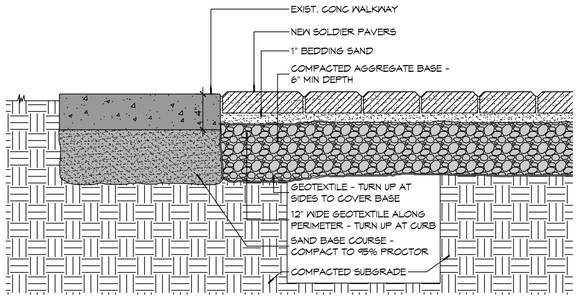

2 WALKWAY DETAIL
SCALE: 1 1/2"=1'

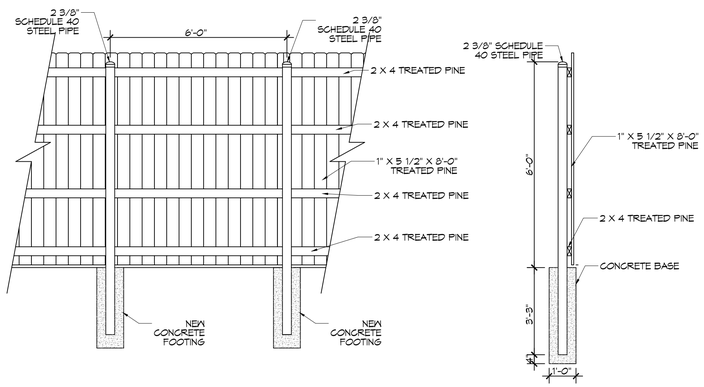

3 SIX FOOT FENCE DETAIL
SCALE: 1 1/2"=1'

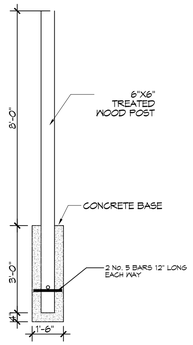

4 TWELVE FOOT LIGHT POLE
SCALE: 1 1/2"=1'

GENERAL NOTES

1. SIDEWALK RADII DIMENSIONS ARE TO SIDEWALK CENTERLINE UNLESS NOTED OTHERWISE.
2. CENTER POINT FOR RADII ARE IDENTIFIED AS WORKPOINT (WP).
3. MAXIMUM SIDEWALK INCLINE SHALL NOT EXCEED 5%.
4. WHERE CROSS SLOPE OCCURS, SLOPE SHALL NOT EXCEED 5% AND SLOPE IN THE DIRECTION OF ROBERT STREET.
5. SLOPE PROFILE OF NEW SIDEWALK SHALL CONFORM TO EXIST ADJACENT GRADE ELEVATIONS AT ENDS OF FORMS PROVIDED THAT SLOPE CONFORMS TO NOTE 3.
6. CONTRACTOR SHALL FIELD VERIFY EXISTING LANDMARKS, LOCATIONS, CONDITIONS PRIOR TO CONSTRUCTION AND NOTIFY ARCHITECT WHERE ANY DISCREPANCIES WITH CONSTRUCTION OCCUR.
7. ALL DIMENSIONS ARE ±.

BRICK COUNT

4"X8" ENGRAVED TILE BRICKS - 2,804 ±

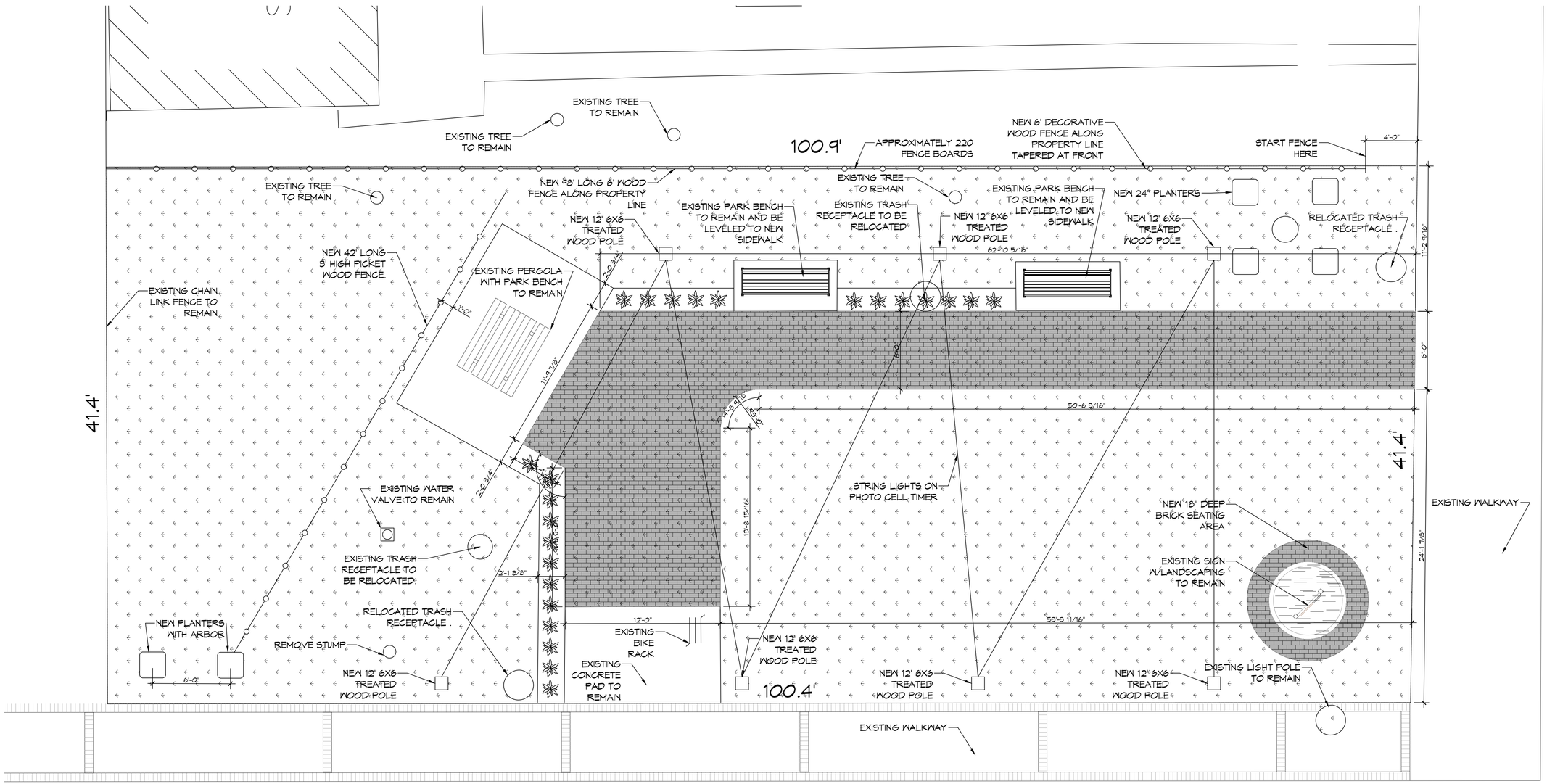

1 SITE PLAN
SCALE: 1/4"=1'

DAMMON ENGINEERING, INC.
LOUISIANA & MISSISSIPPI
www.dammonengineering.com
info@dammonengineering.com
PH: 985.649.9832
Chief Engineer: Brian Mistich, PE
5544 Crowder Trail
Slidell, LA 70458

#	DESCRIPTION	DATE

REVISIONS

SEAL:

PARK IMPROVEMENT

MAIN STREET SLIDELL

2302 CAREY ST.
SLIDELL, LA. 70458

JOB No: 2024
DATE: 05-29-2024
DRAWN BY: CKD
CHECKED BY: CKD

THE DESIGNS, DRAWINGS AND SPECIFICATIONS AS INSTRUMENTS OF SERVICE ARE AND SHALL REMAIN THE PROPERTY OF DAMMON ENGINEERING, INC. WHETHER THE PROJECT FOR WHICH THEY WERE MADE IS EXECUTED OR NOT. THE REPRODUCTION, ALTERATION OR REPUBLICATION IN WHOLE OR IN PART, BY ANY METHOD OR PROCESS, WITHOUT THE WRITTEN PERMISSION OF DAMMON ENGINEERING, INC. IS PROHIBITED. THEY ARE TO BE USED ONLY FOR THE PROJECT FOR WHICH THEY WERE PREPARED AND PROVIDED, UNLESS PRIOR WRITTEN AGREEMENT IS OBTAINED FROM DAMMON ENGINEERING, INC. ANY REUSE WITHOUT WRITTEN VERIFICATION OR ADAPTATION BY DAMMON ENGINEERING, INC. FOR THE SPECIFIED PURPOSE INTENDED WILL BE AT THE USER'S SOLE RISK AND WITHOUT LIABILITY OR LEGAL EXPOSURE TO DAMMON ENGINEERING, INC.

SHEET TITLE:
NEW PARK IMPROVEMENTS

DRAWING NUMBER:
C100

SHEET No: 1 of 1