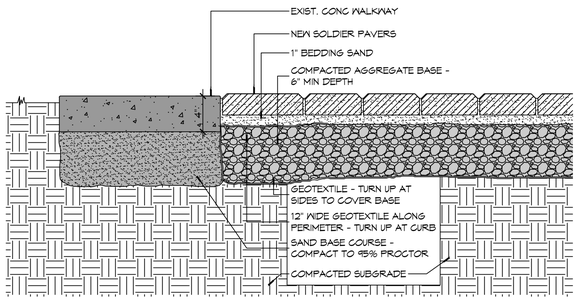

2 WALKWAY DETAIL
SCALE: 1 1/2"=1'

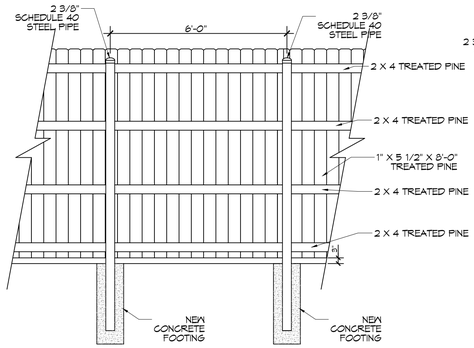

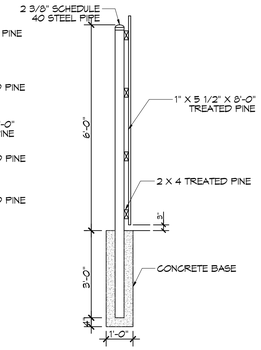

3 SIX FOOT FENCE DETAIL
SCALE: 1 1/2"=1'

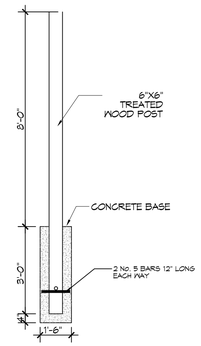

4 TWELVE FOOT LIGHT POLE
SCALE: 1 1/2"=1'

GENERAL NOTES

1. SIDEWALK RADII DIMENSIONS ARE TO SIDEWALK CENTERLINE UNLESS NOTED OTHERWISE.
2. CENTER POINT FOR RADII ARE IDENTIFIED AS WORKPOINT (WP).
3. MAXIMUM SIDEWALK INCLINE SHALL NOT EXCEED 5%.
4. WHERE CROSS SLOPE OCCURS, SLOPE SHALL NOT EXCEED 5% AND SLOPE IN THE DIRECTION OF ROBERT STREET.
5. SLOPE PROFILE OF NEW SIDEWALK SHALL CONFORM TO EXIST ADJACENT GRADE ELEVATIONS AT ENDS OF FORMS PROVIDED THAT SLOPE CONFORMS TO NOTE 3.
6. CONTRACTOR SHALL FIELD VERIFY EXISTING LANDMARKS, LOCATIONS, CONDITIONS PRIOR TO CONSTRUCTION AND NOTIFY ARCHITECT WHERE ANY DISCREPANCIES WITH CONSTRUCTION OCCUR.
7. ALL DIMENSIONS ARE ±.

BRICK COUNT

4"X8" ENGRAVED TILE BRICKS - 2,804 ±

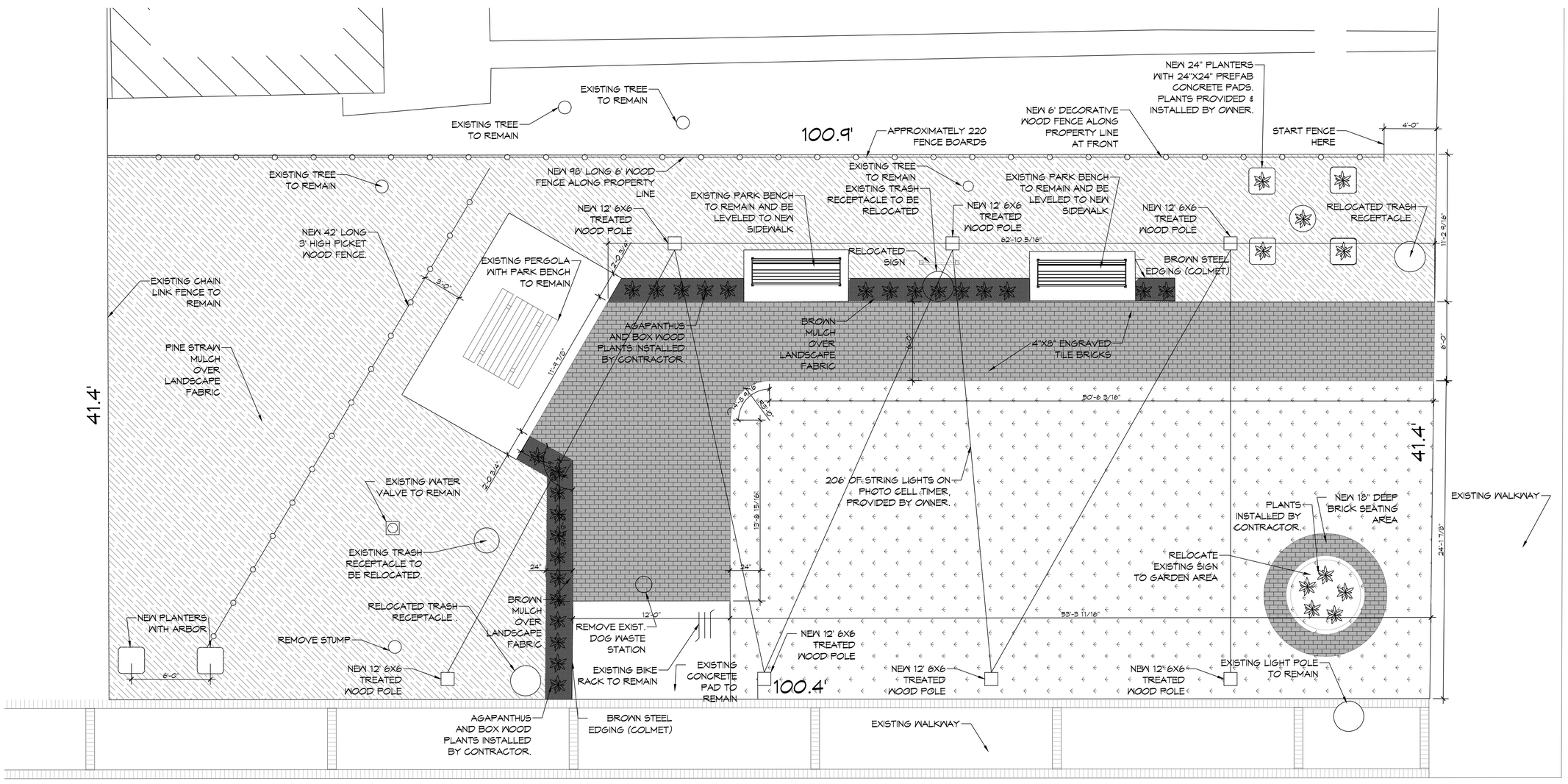

1 SITE PLAN
SCALE: 1/4"=1'

DAMMON ENGINEERING, INC.
LOUISIANA & MISSISSIPPI

www.dammonengineering.com
info@dammonengineering.com
PH: 985.649.9832

Chief Engineer: Brian Mistich, PE
5545 Crowder Trail
Slidell, LA 70458

#	DESCRIPTION	DATE

REVISIONS

SEAL:

PARK IMPROVEMENT

MAIN STREET
SLIDELL

2302 CAREY ST.
SLIDELL, LA. 70458

JOB No: 2024		DATE:	06-12-2024
DRAWN BY:	CJC	CHECKED BY:	CJC

All dimensions, designs, arrangements and plans shown on this paper are the property of Dammon Engineering, and may not be reproduced or used for any other purpose than that for which the same are loaned or submitted, and upon request they are to be returned to Dammon Engineering upon completion of the work for which they are loaned or submitted, unless permission to retain them is granted in writing by Dammon Engineering.

SHEET TITLE:
PARK IMPROVEMENTS

DRAWING NUMBER:
C100

SHEET No: 1 of 1

FILE NAME: J:\- Commercial\Main Street Slidell\Current Drawings\C100 - Site Plan.dwg PLOT DATE & TIME: Thursday, June 13, 2024 8:33:13 AM