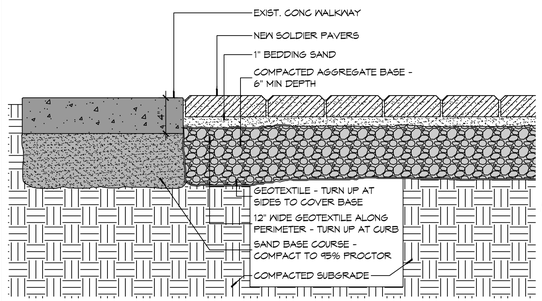


## 2 WALKWAY DETAIL
SCALE: 1 1/2"=1'

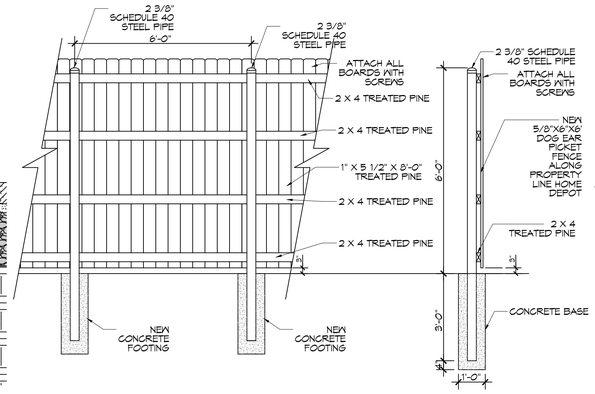


## 3 SIX FOOT FENCE DETAIL
SCALE: 3/8" = 1'-0"

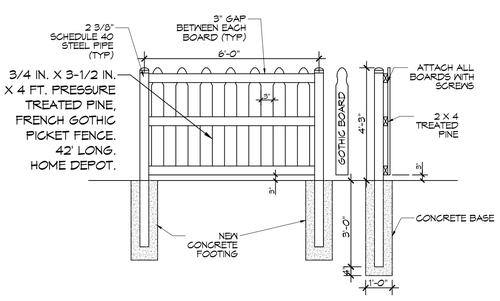


## 4 FOUR FOOT FENCE DETAIL
SCALE: 3/8" = 1'-0"

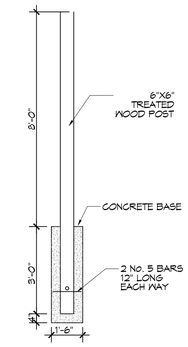


## 5 LIGHT POLE
SCALE: 3/8" = 1'-0"

## GENERAL NOTES

1. SIDEWALK RADII DIMENSIONS ARE TO SIDEWALK CENTERLINE UNLESS NOTED OTHERWISE.
2. CENTER POINT FOR RADII ARE IDENTIFIED AS WORKPOINT (WP).
3. MAXIMUM SIDEWALK INCLINE SHALL NOT EXCEED 5%.
4. WHERE CROSS SLOPE OCCURS, SLOPE SHALL NOT EXCEED 5% AND SLOPE IN THE DIRECTION OF ROBERT STREET.
5. SLOPE PROFILE OF NEW SIDEWALK SHALL CONFORM TO EXIST ADJACENT GRADE ELEVATIONS AT ENDS OF FORMS PROVIDED THAT SLOPE CONFORMS TO NOTE 3.
6. CONTRACTOR SHALL FIELD VERIFY EXISTING LANDMARKS, LOCATIONS, CONDITIONS PRIOR TO CONSTRUCTION AND NOTIFY ARCHITECT WHERE ANY DISCREPANCIES WITH CONSTRUCTION OCCUR.
7. ALL DIMENSIONS ARE ±.

## BRICK COUNT

4"X8" ENGRAVED TILE BRICKS - 2,804 ±

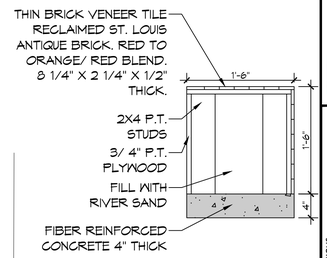


## 6 BRICK BENCH SEAT
SCALE: 1" = 1'-0"

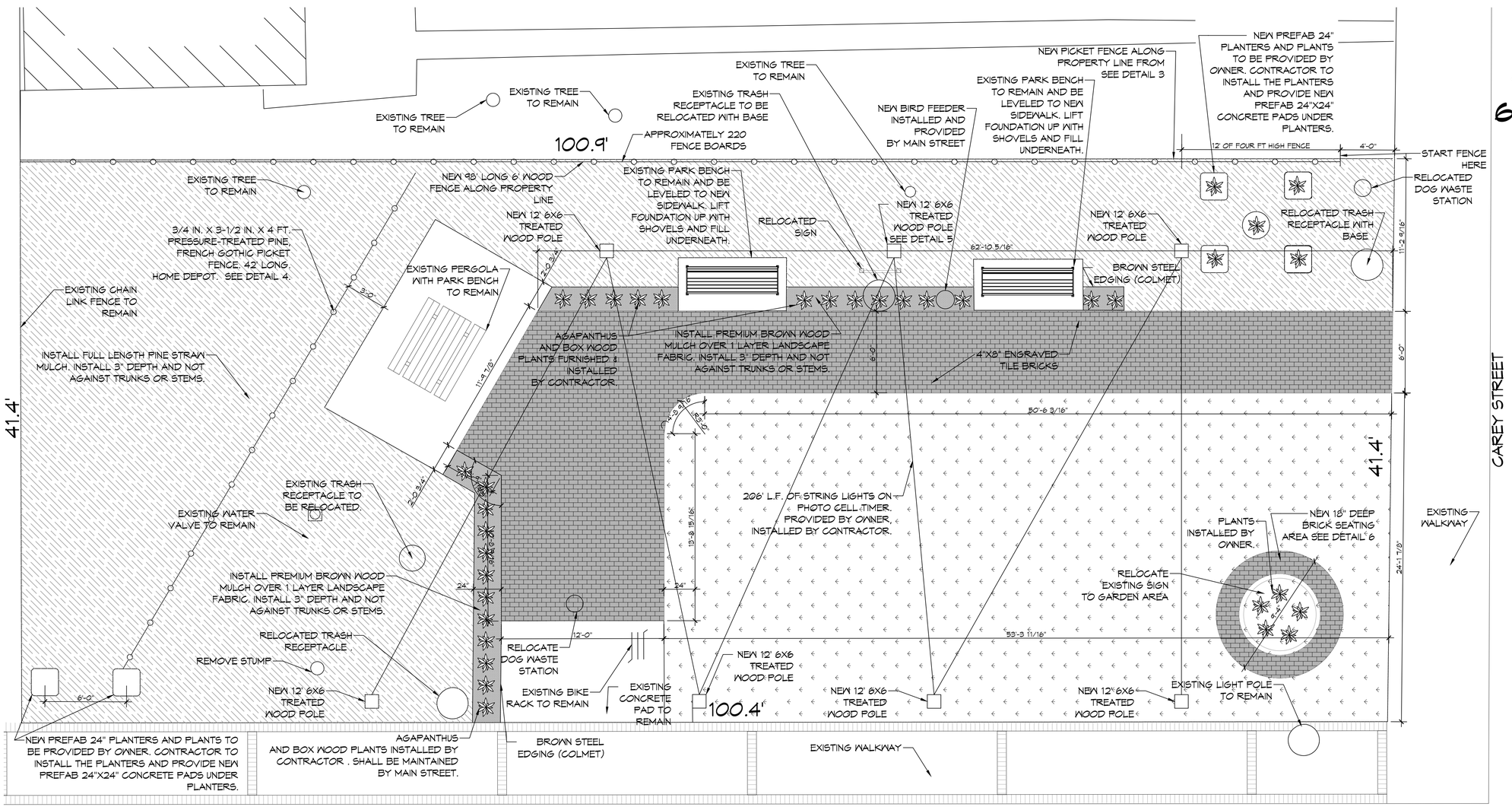


## 1 SITE PLAN
SCALE: 1/4"=1'-0"


DAMMON ENGINEERING, INC.
LOUISIANA & MISSISSIPPI
www.dammoneningeering.com
info@dammoneningeering.com
PH: 985.649.5832
Chief Engineer: Brian Mistich, PE
5404 Cypress Trail
Slidell, LA 70458


| # | DESCRIPTION | DATE |
|---|---|---|
| | | |

REVISIONS

SEAL:

PARK IMPROVEMENT
MAIN STREET
SLIDELL
2302 CAREY ST.
SLIDELL, LA. 70458


THIS DOCUMENT IS THE PROPERTY OF DAMMON ENGINEERING, INC. AND MUST BE RETURNED ON REQUEST. ALL REPRODUCTIONS, COPIES OR USES OF THIS DOCUMENT WITHOUT THE WRITTEN CONSENT OF DAMMON ENGINEERING, INC. ARE PROHIBITED. THIS DOCUMENT, OR ANY PART THEREOF, MUST NOT BE USED FOR ANY PURPOSE NOT SPECIFICALLY AGREED TO IN WRITING BY DAMMON ENGINEERING, INC.


| | |
|---|---|
| DRAWN BY: | CAD |
| CHECKED BY: | CAD |
| DATE: | 08-01-2024 |
| JOB No: | 2024 |

SHEET TITLE:
PARK IMPROVEMENTS

DRAWING NUMBER:
C100

SHEET No: 1 of 1